DEPARTMENT OF THE ARMY
US ARMY INSTALLATION MANAGEMENT COMMAND
HEADQUARTERS, UNITED STATES ARMY GARRISON
4551 LLEWELLYN AVENUE, SUITE 5000
FORT GEORGE G. MEADE, MARYLAND 20755-5000

REPLY TO ATTENTION OF:

November 14, 2013

Directorate of Public Works

Mr. John Burchette
NPL/BRAC/Federal Facilities Branch
U.S. Environmental Protection Agency
1650 Arch Street
Philadelphia, PA 19103-2029

Dear Mr. Burchette:

Enclosed please find the November 2013 *Final Remedial Design FGGM-13, Former Pesticide Shop* (RD) for your review and comment. The RD has been revised based on comments received from the United States Environmental Protection Agency (USEPA) on October 21, 2013, and the Maryland Department of the Environment (MDE) concurred with the Draft Final RD on November 12, 2013. Responses to comments are incorporated into the RD as an appendix. Copies of the RD have been furnished to Mick Butler (Fort George G. Meade), Fran Coulters (U.S. Army Environmental Command), Elisabeth Green (MDE), and the Fort George G. Meade Restoration Advisory Board.

While the Federal Facility Agreement allows for a 30 day review period, the Army requests an expedited review and submission of comments or a no additional comment letter by November 18, 2013. Initiation of the excavation is currently scheduled to start on or around November 20, 2013. Written comments should be addressed to Fort George G. Meade, Attention: IMNE-MEA-PWE (Paul Fluck), 4215 Roberts Ave., Room 320, Fort Meade, Maryland 20755-7068 or paul.v.fluck.civ@mail.mil.

If you have any questions, please feel free to contact Ms. Denise Tegtmeyer at (301) 677-9559 or me at (301) 677-9365.

Sincerely,

Paul V. Fluck

Paul V. Fluck, P.G. REP
Program Manager, Installation Restoration Program
Directorate of Public Works-Environmental Division

Enclosure

ARCADIS

Imagine the result

FINAL
Remedial Design

FGGM 13, Former Pesticide Shop, Building 6621

Fort George G. Meade, Maryland

November 2013

Final Remedial Design
FGGM 13, Former Pesticide Shop, Building 6621

Fort George G. Meade, Maryland

Bob White, PE
Project Engineer

Brian Stempowski, PE, PMP
Phase Manager

Tim Llewellyn
Project Manager

Prepared for:
U.S. Army

Prepared by:
ARCADIS U.S., Inc.
1114 Benfield Boulevard
Suite A
Millersville
Maryland 21108
Tel 410 987 0032
Fax 410 987 4392

Our Ref.:
GP09MEAD.PEST.HG001

Date:
November 2013

Table of Contents

Executive Summary **ES-1**

1. Introduction **1**

1.1 Purpose and Scope 1

1.2 Background and Existing Conditions 2

1.3 Pre-Excavation Sampling and Waste Characterization 3

1.3.1 Pre-Excavation Sampling 4

1.3.2 Pre-Excavation Sampling Results 5

1.3.3 Data Evaluation and Excavation Delineation 5

1.3.4 Waste Characterization Results 6

1.3.5 Additional In-Situ Waste Characterization 6

1.4 Organization of Report 8

2. Design Criteria **10**

2.1 Remedial Action Objectives 10

2.2 Achieving the RAOs and Other Requirements 10

2.3 State and Federal Regulatory Requirements 10

2.4 Site Considerations 12

3. Remedial Action – Soil Removal **13**

3.1 Description of Selected Remedy 13

3.2 Pre-Removal Action Activities 14

3.2.1 Permitting 15

3.2.2 Monitoring Well Abandonment 15

3.2.3 Utility Clearance and Modification of Underground Utilities 16

3.2.4 Analytical Testing of Common Borrow and Topsoil 16

3.2.5 Additional Pre-Construction Coordination 17

3.3 Site Layout, Control, and Decontamination 18

3.3.1 Site Controls and Access 18

3.3.2 Tree Removal 19

3.3.3 Exclusion, Contaminant-Reduction, and Support Zones 19

3.3.4 Surveying 20

3.3.5 Decontamination 20

3.4 Erosion and Sediment Controls and Stormwater Management Waiver 20

3.5 Excavation 21

3.6 Dust Control 22

3.7 Air Monitoring 22

3.8 Transportation, Treatment, and Disposal 23

3.9 Soil Conditioning and Excavation Dewatering 24

3.10 Backfill and Site Grading 26

3.10.1 Common Borrow Backfill 26

3.10.2 Vegetative Soil 26

3.11 Demobilization and Site Restoration 26

4. Enhanced Reductive Dechlorination 28

4.1 Basis for Design 28

4.1.1 Implementation of In-Situ Reactive Zone Barrier Using Emulsified Vegetable Oil 29

4.2 In-Situ Reactive Zone Design 30

4.2.1 Design Parameters 30

4.2.2 Injection Solution 31

4.3 In-Situ Reactive Zone Implementation 32

4.3.1 Permitting 32

4.3.2 Utility Clearance 33

4.3.3 Injection Methodology 33

4.3.4 Injection Solution Mixing and Distribution Infrastructure 33

4.3.5 Water Supply for Injection Solution Mixing 33

4.3.6 Injection Test 34

4.3.7 Injection System Operation 35

4.3.8 Performance Monitoring 35

4.3.9 In-Situ Reactive Zone Shut-off Criteria 35

5. Land Use Controls 37

5.1 Existing LUCs at FGGM 13 37

5.2 Land Use Control Implementation 38

6. Remedial Action Quality Assurance 40

6.1 Imported Fill 40

6.1.1 Pre-Construction 40

6.1.2 Construction 40

6.1.3 Post-Construction 40

6.2 Topsoil 41

6.2.1 Pre-Construction 41

6.2.2 Construction 41

6.2.3 Post-Construction 41

7. Long Term Monitoring and Maintenance 42

7.1 Monitoring Well Installation 42

7.2 Site Inspection, Maintenance, and Land Use Controls 42

7.3 Long Term Monitoring and Performance Monitoring 43

8. Implementation Schedule 45

9. Safety and Health 46

10. References 47

Tables

Table 1 Pre-Excavation Soil Sampling Results - Pesticides

Table 2 Pre-Excavation Soil Sample Results – VOC Detections

Table 3 Waste Characterization Sampling Results

Table 4 June 2013 Supplemental Waste Characterization Results

Table 5 Long Term Monitoring Program Schedule

Table of Contents

Figures

Figure 1 Site Location Map

Figure 2 FGGM13 Former Pesticide Shop, Building 6621 Site Location Map

Figure 3 FGGM13 Former Pesticide Shop, Building 6621 Site Map

Figure 4 Enhanced Reductive Dechlorination Layout

Figure 5 Extent of Land Use Controls

Figure 6 Proposed Monitoring Well (MW-9) Installation Location

Figure 7 Schedule

Appendices

Appendix A Drawings

GENERAL DRAWINGS:

1. GENERAL NOTES, LEGEND, AND ABBREVIATIONS
2. EXISTING CONDITIONS
3. PRE-EXCAVATION SOIL SAMPLING RESULTS – TOTAL CHLORDANE/TCLP
4. SITE PREPARATION PLAN
5. EXCAVATION PLAN

EROSION AND SEDIMENT CONTROL PERMIT DRAWINGS:

ES-1. EROSION AND SEDIMENT CONTROL NOTES AND LEGEND
ES-2. EROSION AND SEDIMENT CONTROL NOTES AND TABLES
ES-3. EROSION AND SEDIMENT CONTROL PLAN
ES-4. EROSION AND SEDIMENT CONTROL DETAILS
ES-5. FINAL GRADING AND RESTORATION

Appendix B Pre-Excavation Sampling Work Plan, Laboratory Data Reports (Provided on CD) and Field Forms

Appendix C Erosion and Sediment Control Permit Equivalency

Appendix D Non-Attainment Zone Air Permitting Information

Appendix E Air Monitoring Protocol

Appendix F Traffic Control Plan

Appendix G Newman Zone Formulations

Appendix H HASP Addendum

Appendix I Land Use Certification Form

Appendix J Response to Comments

List of Acronyms and Abbreviations

%	Percent
µg/kg	micrograms per kilogram
AR	Army Regulation
ARARs	Applicable or Relevant and Appropriate Requirements
ARCADIS	ARCADIS U.S. Inc.
bgs	below ground surface
CERCLA	Comprehensive Environmental Response, Compensation, and Liability Act
CFR	Code of Federal Regulations
COCs	Constituents of Concern
COMAR	Code of Maryland Regulations
CQA/QC	Construction Quality Assurance/Quality Control
CSL	Closed Sanitary Landfill
CVOCs	Chlorinated Volatile Organic Compounds
cy	cubic yards
DES	Department of Emergency Services
DPT	Direct Push Technology
E&SC	Erosion and Sediment Control
ECs	Engineering Controls
ERD	Enhanced Reductive Dechlorination
EVO	emulsified vegetable oil
FGGM	Fort George G. Meade
FGGM 13	Former Pesticide Shop, Building 2261
ft	feet/foot
GIS	geographical information system
HASP	Health and Safety Plan

List of Acronyms and Abbreviations continued

ICs	Institutional Controls
IRP	Installation Restoration Program
IRZ	in-situ reactive zone
LTM	Long Term Monitoring
LUC	Land Use Controls
MCLs	Maximum Contaminant Levels
MDE	Maryland Department of the Environment
mg/m^3	milligram per cubic meter
NAAL	Natural Attenuation Action Levels
NCP	National Oil and Hazardous Substance Contingency Plan
NOx	Nitrogen Oxide
PM2.5	Particulate matter less than or equal to 2.5 microns in diameter
RAOs	Remedial Action Objectives
RCRA	Resource Conservation and Recovery Act
RD	Remedial Design
ROD	Record of Decision
RSLs	Regional Screening Levels
SAP	Sampling Analysis Plan
SCL	Site Cleanup Level
Site	FGGM 13, Former Pesticide Shop, Building 6621
TCLP	Toxicity Characteristic Leaching Procedure
USEPA	United States Environmental Protection Agency
VOCs	Volatile Organic Compounds

Executive Summary

ARCADIS U.S. Inc. has been retained by the U.S. Army Environmental Command to perform Installation Restoration Program (IRP) activities at Fort George G. Meade (FGGM), located in Anne Arundel County, Maryland (**Figure 1**).

The IRP activities at FGGM operate principally under the Comprehensive Environmental Response, Compensation, and Liability Act as amended by the Superfund Amendments and Reauthorization Act of 1986 and National Oil and Hazardous Substances Pollution Contingency Plan [40 Code of Federal Regulations 300]. Coordination and input are provided by the United States Environmental Protection Agency Region III per the FGGM Federal Facilities Agreement, and as appropriate, with the Maryland Department of the Environment and, for specific sites, the Architect of the Capitol and the Department of Interior.

The Former Pesticide Shop, Building 6621, FGGM 13 (hereinafter referred to as “the Site” or FGGM 13) is located at the northwest corner of the intersection of Gordon Street and York Avenue (**Figure 2** and **Figure 3**). Former Building 6621 was located on the Site and was reportedly labeled as a "Mess Hall" in the Real Property records and had been used during World War II as a mess hall for prisoners of war. The building was subsequently used as a pesticide shop for 20 years between 1958 and 1978. During its operation as a pesticide shop, the building also housed a maintenance facility for lawn mowers, tractors, and other landscaping equipment. Releases of pesticides during this time were due to spills and mishandling of pesticides and not due to legal application of pesticides. Building 6621 was demolished and the Site was graded in 1996 (NuTec, 1997). The Site is presently a fenced-in lot with no structures.

This Remedial Design has been prepared to specify the methods and materials for the implementation of the selected remedy at FGGM 13 as specified in the approved Record of Decision (ROD) (U.S. Army, 2012). The remedial action objections (RAOs), as stated in the ROD (U.S. Army, 2012), are based on human health and environmental factors, and provided the basis for the formulation and development of the selected remedy. The RAOs for the selected remedy at the Site are as follows:

- Prevent human exposure to soil that would cause unacceptable risk to human health;

- Prevent human exposure to groundwater that would cause unacceptable risk; and

- To achieve maximum contaminant levels for the identified constituents of concern (COCs) in groundwater within a reasonable timeframe, thereby restoring groundwater to its beneficial use.

This remedy will attain the above mentioned RAOs by reducing risk to human health through bulk removal of COCs in soil via excavation and COC reduction in groundwater via enhanced reductive dechlorination. Furthermore, existing land use controls (LUCs) will be enhanced and maintained to control future residential and groundwater use at the Site.

A removal action will be conducted to perform environmental remediation of soil that is contaminated with pesticides at concentrations above the Site Cleanup Levels. Approximately 850 cubic yards of contaminated soil will be excavated, transported, treated, and disposed of at an approved landfill. The excavation of contaminated soil will proceed to a depth of 14 feet below ground surface. Following excavation, the Site will be backfilled with clean fill, graded to match existing grades, and then stabilized with grass.

In addition to the removal action, enhanced reductive dechlorination technology will be implemented to address volatile organic compounds in groundwater. An emulsified vegetable oil (EVO) solution will be prepared and injected into the subsurface via direct-push borings located across two transects aligned perpendicular to groundwater flow. Approximately 21,150 gallons of EVO solution will be injected across two transects in a total of six direct-push borings.

The final component of this design will include the enhancement and maintenance of existing LUCs and long term monitoring of groundwater. A new groundwater monitoring well, MW-9, will be installed at the intersection of York Avenue and Gordon Street.

1. Introduction

ARCADIS U.S. Inc. (ARCADIS) has been retained by the U.S. Army Environmental Command to perform Installation Restoration Program (IRP) activities at Fort George G. Meade (FGGM), located in Anne Arundel County, Maryland. This work is being conducted under a Performance Based Contract associated with the environmental restoration program at FGGM. The full scope of services for this contract is defined in Contract W91ZLK-05-D-0015: Task 0005.

The IRP activities at FGGM are conducted under the U.S. Army's Defense Environmental Restoration Program and operate principally under the Comprehensive Environmental Response, Compensation, and Liability Act (CERCLA) as amended by the Superfund Amendments and Reauthorization Act of 1986 and National Oil and Hazardous Substances Pollution Contingency Plan (NCP) [40 Code of Federal Regulations (CFR) 300]. FGGM was placed on the National Priorities List on July 28, 1988. Coordination and input are provided by the United States Environmental Protection Agency (USEPA) Region III, and as appropriate, with the other signatories of the FGGM Federal Facilities Agreement, including the Architect of the Capitol and the Department of Interior. Input and coordination from Maryland Department of the Environment (MDE) was also solicited.

1.1 Purpose and Scope

This Remedial Design (RD) has been prepared to specify the methods and materials for the implementation of the selected remedy at FGGM 13, Former Pesticide Shop (hereinafter referred to as "the Site" or FGGM 13) as specified in the approved final Record of Decision (ROD) (U.S. Army, 2012). In addition to this RD, an Addendum was developed to provide additional details pertaining to the proposed excavation methodology to be implemented at the Site. The Draft RD Addendum is being submitted separately to the U.S. Army, USEPA, and MDE. The selected remedy addresses unacceptable risk for potential future use scenarios due to exposure to contaminants in soil and groundwater, and consists of the following components:

- Soil excavation with off-Site disposal that exceed the Site Cleanup Levels (SCL) for Chlordane and Heptachlor Epoxide (16,210 ug/kg and 770 ug/kg; respectively);

- Enhanced reductive Dechlorination (ERD) with Long Term Monitoring for the treatment of Chlorinated Volatile Organic Compounds (CVOCs); and

- Land use controls (LUCs).

1.2 Background and Existing Conditions

FGGM is located midway between the cities of Baltimore, Maryland and Washington D.C. in Anne Arundel County, Maryland, as shown in **Figure 1**. FGGM 13 is located at the northwest corner of the intersection of Gordon Street and York Avenue in the southern portion of FGGM. A Site location map is provided as **Figure 2**, and an aerial map of the Site is presented as **Figure 3**.

The Former Pesticide Shop, Building 6621, was reportedly labeled as a "Mess Hall" in the Real Property Master Plan (Atkins, 2011) and had been used during World War II as a mess hall for prisoners of war. The building was subsequently used as a pesticide shop for 20 years between 1958 and 1978. During its operation as a pesticide shop, the building also housed a maintenance facility for lawn mowers, tractors, and other landscaping equipment. Releases of pesticides during this time were due to spills and mishandling of pesticides and not due to legal application of pesticides. Building 6621 was demolished and the Site was regraded in 1996 (NuTec, 1997). The Site is presently a 0.9 acre fenced-in lot with no permanent structures. The ground surface is an open grassed area.

Previous environmental investigations and sampling have been conducted at the Site. All investigations were conducted after Building 6621 was demolished and the Site was regraded in 1996. These investigations include the following:

- Comprehensive Site Assessment and Relative Risk Site Evaluation for Building 6621 (NuTec, 1997);
- 2003 Soil Investigation at Former Building 6621 (Versar, 2003);
- 2004 Soil Investigation at Former Building 6621 (Versar, 2004);
- 2007 Remedial Investigation for the Former Pesticide Shop, Building 6621 (URS, 2007);
- 2011 Remedial Investigation Report (ARCADIS, 2011a); and

- Pre-excavation sampling conducted in November 2012, January 2013, and June 2013 to delineate the horizontal and vertical extent of excavation at the Site and to provide for waste characterization.

The following conclusions are based upon the previous investigations:

- The nature and extent of contamination in soil and groundwater is centrally located in the immediate vicinity of former Building 6621 and is consistent with spills and mishandling of chemicals used during the operation of the former pesticide shop.

- Surface and subsurface soil contains concentrations of pesticides and arsenic that exceed applicable screening levels.

- Arsenic was the only metal frequently detected in soil above the maximum background concentration. Arsenic is likely naturally occurring.

- Groundwater chlorinated volatile organic compounds (CVOC) exceedances are present in the immediate vicinity of the former pesticide handling area (e.g., MW-2R and MW-3R) and are limited in horizontal and vertical extent. CVOCs were used as a carrier for the pesticides, and that the source of the CVOCs within groundwater is the soil above the water table.

- The delineation of groundwater exceedances is horizontally and vertically complete. Samples from wells located downgradient of the Site did not have constituent concentrations exceeding the USEPA Maximum Contaminant Levels (MCLs). Furthermore, a thick clay layer was identified preventing the vertical migration of constituents.

Pre-excavation sampling was conducted in November 2012, January 2013, and June 2013 to delineate the extent of pesticide impacted soils and to characterize wastes prior to disposal. Analytical results and evaluation are presented in the following section. A comprehensive summary of the remaining previous investigations listed above and Site conditions are contained within the Final Focused Feasibility Study (ARCADIS, 2012).

1.3 Pre-Excavation Sampling and Waste Characterization

The following subsections present the methodologies, results, and interpretation of the pre-excavation delineation sampling. Results of the pre-excavation delineation

sampling are tabulated in **Tables 1** and **2**. In addition, **Appendix A** (Drawing #3) depicts the chlordane results. The analytical lab reports and field forms associated with the pre-excavation delineation sampling are provided in **Appendix B**.

1.3.1 Pre-Excavation Sampling

Pre-excavation sampling was conducted in three rounds. The first round of pre-excavation samples (SB01 to SB09) was collected on November 27-28, 2012. The pre-excavation samples were collected to delineate the extent of pesticide impacted soils and to characterize wastes prior to disposal. Pre-excavation samples were collected utilizing direct push technology (DPT) with clear acetate sleeves at nine sample locations. Sample locations were spaced on a 20-foot (ft) grid oriented generally north-south surrounding MW-2R and were collected from 0-2, 4-6, and 8-10 ft below ground surface (bgs) to provide representative samples, both horizontally and vertically, corresponding to the proposed excavation area.

Following validation and evaluation of pre-excavation data, a second sampling event was required to provide further horizontal and vertical delineation of pesticide impacted soils. The second round of samples (SB10 to SB18, SB23, and SB24) were collected on January 29, 2013.

A third round of pre-excavation sampling was conducted on June 17-18, 2013 to confirm the northern (SB12 and SB13) and eastern (SB15 and SB16) limit of excavation at the 8 –10 ft bgs interval. Four DPT borings (SB-12A, SB-13A, SB-15A and SB-16A) were installed to a terminal depth of 10 ft. One soil sample was collected from each boring and composited from 8-10 ft bgs. Results of the third round of sampling confirmed delineation of the excavation. Sample locations were surveyed by a registered surveyor licensed in the State of Maryland on March 13, 2013 and are presented on **Appendix A** (Drawing #3).

All field activities associated with pre-excavation sampling were completed in accordance with the approved Pre-Excavation Delineation Soil Sampling Work Plan (included as **Appendix B**). In addition, work was conducted in accordance with the procedures established in the following site-wide documents developed by ARCADIS for work under the FGGM Performance Based Acquisition:

- Waste Management Plan for the Performance Based Acquisition at FGGM (ARCADIS, 2010a);

- Health and Safety Plan (HASP) for the Performance Based Acquisition at FGGM (ARCADIS, 2010b);
- Quality Assurance Project Plan for the Performance Based Acquisition at FGGM (ARCADIS, 2011b); and
- Sampling and Analysis Plan (SAP) for the Performance Based Acquisition at FGGM (ARACDIS, 2011c).

1.3.2 Pre-Excavation Sampling Results

Pre-excavation samples were analyzed for chlordane and heptachlor epoxide via USEPA Method 8081 (refer to **Table 1**). Heptachlor epoxide was not detected above the site cleanup level (SCL) of 770 microgram per kilogram (µg/kg). Chlordane was detected above the SCL of 16,210 µg/kg in 16 of 52 soil samples analyzed at concentrations ranging from 21,000 µg/kg (SB03A [16 -18 ft bgs] and SB08 [0-2 ft bgs]) to 1,100,000 µg/kg (SB03 [0-2] ft bgs).

In addition, select intervals of soil borings SB03, SB05, and SB06 were also analyzed for volatile organic compounds (VOCs) via USEPA Method 8260 because soil samples originating from these intervals/locations were noted as having a volatile organic odor. Results of the VOC analysis are presented in **Table 2**. The soil data were compared against the USEPA Region III residential and industrial screening levels. None of the VOC samples exceeded the residential screening level for soil.

1.3.3 Data Evaluation and Excavation Delineation

The most prevalent concentrations of chlordane were observed within the surficial soils (0-2 ft bgs), with the highest detected concentration at SB03 (nearby monitoring well MW-2). In general, the horizontal exceedances of the SCL within the surficial soils are confined to two north-south oriented sample transects (i.e., the sample transects immediately east and west of monitoring well MW-2). Furthermore, the horizontal distribution of chlordane exhibits a distinct gradient in that the borings that are below the SCL, and adjacent to an SCL exceedances, exhibit a several order of magnitude reduction of chlordane (e.g., SB06 and SB16 on the east side, and SB07 and SB08 and the west side). This gradient is indicative that the horizontal extent of the excavation has been substantially delineated within the 0-2 ft and 4-6 ft bgs intervals.

The vertical distribution of chlordane is limited primarily to borings SB02 and SB03; and to a lesser extent to SB05 and SB06 (within the 8-10 ft bgs interval). The remaining borings exhibit a decreasing trend of chlordane between the 0-2 ft bgs, 4-6 ft bgs, and the 8-10 ft bgs interval. Although the concentration of chlordane within SB03A exceeded the SCL to a depth of 18 ft bgs; the chlordane concentrations at SB03A demonstrate a marked decline between the 10-12 ft interval and the subsequent deeper intervals. In addition, the 14-16 ft bgs interval within SB03A is below the SCL.

Previous groundwater gauging of MW-2R indicates that the water table is approximately 16-17 ft bgs; and the decline in the SCL exceedances within the greater depths at SB03A (e.g., the 14-16 and 16-18 ft bgs intervals) correlate to the soil/water table interface. Therefore, excavation of the impacted soil to a depth of 14 ft bgs will remove the source of pesticide impacts to groundwater.

Based upon the observed data and the above discussion, the horizontal and vertical extent of the proposed excavation area is fully delineated.

1.3.4 Waste Characterization Results

In addition to the pre-excavation delineation sampling, waste characterization samples were collected to profile the waste material prior to transportation and disposal at the accepting disposal facility. Three waste characterization samples were collected (WC, WC-1, and WC-2) and analyzed for the following toxicity characteristic leaching procedure (TCLP) analytical suites: VOCs, semi-volatile organic compounds, pesticides/herbicides, and metals. The results of this initial waste characterization sampling event are presented within **Table 3**. The data indicate that two of the three waste characterization samples exceed the TCLP threshold value for chlordane. Therefore, additional in-situ waste characterization samples were collected to fully characterize the waste. The results of the waste characterization sampling will be used to prepare a full profile of the waste.

1.3.5 Additional In-Situ Waste Characterization

The waste characterization samples collected to date indicate that some of the soils exceed the 10X rule and will require treatment at the disposal facility. Some of the soils are below the 10X criteria but will still require handling as a hazardous waste. The final off-site disposal facility will be approved by the Army and regulatory agencies prior to transport of waste material for treatment and disposal. The USEPA's approval

of the selected disposal facility will ensure it complies with USEPA's Off –Site Rule. The Off-Site Rule was promulgated on September 22, 1993 (52 Federal Register 49200). The regulatory citation is 40 CFR 300.440. The Off-Site Rule mandates that that CERCLA wastes may only be placed in a facility operating in compliance with the Resource Conservation and Recovery Act (RCRA) or other applicable Federal or State requirements.

Due to the concentration of chlordane observed within the soil samples, a portion of the excavated soil will require treatment prior to disposal to comply with the Land Disposal Restrictions (40 CFR Part 268). However, the suitability of a particular treatment technology is dependent upon the chlordane concentrations within the soil. Due to the variability of chlordane concentrations (i.e., chlordane ranges from non-detect or below the SCL to 1,100,000 µg/kg) within the soil, additional in-situ waste characterization data was collected in June 2013 with the following intent:

- To determine if any portion of the soil may be disposed of within a subtitle C landfill without treatment; and if treatment is necessary, what treatment or combination of treatment processes would be most effective considering the chlordane concentrations (e.g., thermal oxidation or chemical oxidation);

- To determine suitable treatment and disposal facilities;

- To refine the quantities of soil destined for a specific treatment method or disposal facility;

- To optimize control of the excavation, soil segregation, load-out, treatment, and disposal of soil; and

- To ensure that soil is disposed of in accordance with the land disposal restrictions and off-site rule.

Additional in-situ waste characterization samples were collected in June 17-18, 2013 utilizing direct push sampling methodology. Waste characterization samples were collected from within the existing delineated excavation footprint at various locations and depths based upon a refined sampling grid (refer to **Appendix A** - Drawing #3). Soil samples were analyzed for TCLP pesticides and total chlordane. The results of waste characterization sampling indicate that the following three waste streams will be generated at the Site:

- Hazardous soil that exceeds 50 part per million (ppm) of total chlordane which will be treated via thermal oxidation at the disposal facility to reduce the chlordane concentrations prior to final disposal (approximately 200-300 tons);

- Hazardous soil that are below 50 ppm of total chlordane and will be treated via chemical oxidation (approximately 300 – 400 tons); and

- Non-hazardous soil (approximately 625 tons).

Waste characterization results from the June 2013 sample event are provided in **Table 4**. **Appendix A** – Drawing #3 presents the results of waste characterization graphically using shading to represent the waste streams detailed above. An additional letter style report, summarizing the results of the additional waste characterization data and selection of the treatment and disposal facilities, will be transmitted to the Army, USEPA, and MDE for review and approval prior to off-site disposal.

1.4 Organization of Report

Including this introduction, the report is divided into the following nine sections:

- Section 2 – Design Criteria: This section presents criteria that characterize the design, specifically the RAOs, State and Federal Regulatory Requirements, and Site Considerations.

- Section 3 – Removal Action – Soil Removal: This section discusses the manner in which the Removal Action will be accomplished.

- Section 4 – Enhanced Reductive Dechlorination: This section discussed the manner in which ERD will be implemented at the Site.

- Section 5 – Land Use Controls: This section discusses the existing and proposed land use controls at the Site.

- Section 6 – Remedial Action Quality Assurance: This section discusses the means and methods to verify that the construction material and methods are in accordance with the requirements of this RD.

- Section 7 – Long Term Monitoring and Maintenance: This section presents the proposed post construction groundwater monitoring schedule to document the success of the remedy implementation.

- Section 8 – Implementation Schedule: This section provides the anticipated construction schedule to include start dates and durations for the various phases of construction.

- Section 9 – Health and Safety: This section describes the additional health and safety procedures developed for the Site. In general the existing approved site-wide HASP will be used.

- Section 10 – References: Lists the documents referenced within the RD.

2. Design Criteria

Various objectives, criteria, and standards, including Applicable or Relevant and Appropriate Requirements (ARARs) as defined by the CERCLA, were identified during preparation of the ROD. These objectives, criteria, and standards guided the design of the remedial action.

2.1 Remedial Action Objectives

The RAOs, as stated in the ROD (U.S. Army, 2012), are based on human health and environmental factors, and provided the basis for the formulation and development of the selected remedy. The RAOs for the selected remedy at the Site are as follows:

- Prevent human exposure to soil that would cause unacceptable risk to human health;
- Prevent human exposure to groundwater that would cause unacceptable risk; and
- To achieve maximum contaminant levels (MCLs) for the identified constituents of concern (COCs) in groundwater within a reasonable timeframe, thereby restoring groundwater to its beneficial use.

2.2 Achieving the RAOs and Other Requirements

The selected remedy will attain the above mentioned RAOs by reducing risk to human health through bulk removal of COCs in soil via excavation and COC reduction in groundwater via ERD. Furthermore, existing LUCs will be enhanced and maintained to control future residential and groundwater use at the Site.

2.3 State and Federal Regulatory Requirements

A comprehensive list of ARARs and To Be Considered criteria for implementation of the RD are in the ROD (U.S. Army, 2012). The key regulatory programs considered during the design of the remedial action include the following:

- Local construction permits: The FGGM Dig Permit must be obtained 30 days prior to initiation of intrusive activities. No other local construction permits are required.

- Fugitive Dust Controls [Code of Maryland Regulations (COMAR) 26.11.06.03(D)]: Establishes dust emissions criteria for standard construction control methods.

- Erosion/Sedimentation Controls [COMAR 26.17.01]: This regulation is applicable when excavation or on-Site storage of contaminated soil and waste are contemplated. It sets criteria and procedures to protect the lands and waters comprising the watersheds of the state.

- Stormwater Discharge Limitations: National Pollutant Discharge Elimination System General Permits for Stormwater Discharge from Construction Sites and the Maryland Stormwater Management Requirements, COMAR 26.17.02 establish these limits.

- Health and Safety [29 CFR]: The Occupation Safety and Health Administration promulgate standards that regulate work to protect worker health and safety. In particular, the following regulations are applicable to Site work: (1) 29 CFR 1903 (Reporting and Recording Injuries and Illnesses), (2) 29 CFR 1910 (General Industry Standards), and (3) 29 CFR 1926 (Construction Industry Standards).

- Monitoring Well Abandonment and Installation [COMAR 26.04.04]: If any of the existing wells adjacent to the excavation area require abandonment and replacement, then monitoring well abandonment and installation shall be conducted in accordance with Regulation 11 – Abandonment Standards.

- Disposal of Controlled Hazardous Substances [COMAR 26.13]: The regulation authorizes the regulation of the storage, treatment, transportation, and disposal of hazardous materials and controlled hazardous substances.

- Land Disposal Restrictions [40 CFR Part 268]: This regulation prohibits the land disposal of untreated hazardous wastes and identifies treatment standards for hazardous wastes.

- Off-Site Rule [40 CFR 300.440]: The Off-Site Rule mandates that CERCLA wastes may only be placed in a facility operating in compliance with the RCRA or other applicable Federal or State requirements

- Underground Injection Control Program: A USEPA program that regulates the construction, operation, permitting, and closure of injection wells.

2.4 Site Considerations

In addition to the preceding regulatory considerations, the following Site-specific conditions are considered during the design of the remedial action:

- Proximity to the Department of Emergency Services (DES): The Site is located adjacent to FGGM's DES facility which supports installation police, fire, and emergency medical response teams. The close proximity of DES has a direct impact in the consideration of Site access and trucking ingress/egress routes. Site activities will be conducted in a manner that minimizes interference with the DES operations.

- Arts and Crafts Center Parking Lot: A small parking lot is located directly south of the proposed Site ingress/egress. The parking lot is comprised of approximately 25 spaces and supports patrons of the adjacent Arts and Crafts Center. For the duration of the removal action, it is recommend that parking in this area will be prohibited between 0700-1800 hours to eliminate the potential hazard associated with trucks entering the roadway in this area (e.g., collisions, pedestrians in roadway, etc.).

- Underground Utilities: Underground utilities were identified within the excavation area and will require reconfiguration prior to removal activities. Specifically, an east/west oriented underground electric and water utility traverses the excavation. During the utility locate process, it was determined that these utilities formerly serviced a small dog kennel located west of the Site. Furthermore, it was determined that the dog kennel is no longer operational and the utilities are no longer in use. ARCADIS will coordinate with the U.S. Army to obtain authorization to decommission the utilities at their entrance to the Site along the east limit of disturbance. Utilities within the excavation area will be removed and transported off-Site for disposal.

3. Remedial Action – Soil Removal

This section provides a narrative description of the removal action. In addition to this section, the appendices of this report will also serve to guide the implementation of the soil removal action. **Appendix A** contains the Construction Drawings which consists of the following:

GENERAL DRAWINGS:

1. GENERAL NOTES, LEGEND, AND ABBREVIATIONS
2. EXISTING CONDITIONS
3. PRE-EXCAVATION SOIL SAMPLING RESULTS – TOTAL CHLORDANE/ TCLP
4. SITE PREPARATION PLAN
5. EXCAVATION PLAN

EROSION AND SEDIMENT CONTROL PERMIT DRAWINGS:

ES-1. EROSION AND SEDIMENT CONTROL NOTES AND LEGEND
ES-2. EROSION AND SEDIMENT CONTROL NOTES AND TABLES
ES-3. EROSION AND SEDIMENT CONTROL PLAN
ES-4. EROSION AND SEDIMENT CONTROL DETAILS
ES-5. FINAL GRADING AND RESTORATION

3.1 Description of Selected Remedy

The remedy selected within the ROD is Soil Excavation with Off-Site Disposal, ERD with LTM of Groundwater, and LUCs.

A removal action will be conducted to perform environmental remediation of soil that is contaminated with pesticides at concentrations above the SCL. The contaminated soil will be excavated, transported, treated as necessary, and then disposed of at an approved treatment and disposal facility. Based upon the data, the excavation of contaminated soil will proceed to a depth of 14 ft bgs. Groundwater is anticipated to be encountered at approximately 14-16 ft bgs. The additional waste profiling grid sampling to be conducted prior to the action will be provided to the Army, USEPA, and MDE. It is expected that these data will sufficiently define the extent of the excavated area and post excavation sampling will not be required. However, this issue will be

revisited following agency review of the data and approval of the off-site disposal facility. The Site will be backfilled with clean fill, graded to match existing grades, and then stabilized with grass. The removal action will consist of the following major components:

- Site set-up and installation of erosion and sediment controls, designation of equipment staging areas, and establishment of the exclusion zone, contaminate reduction zone, and support zones;
- Expanded in-situ waste characterization sampling;
- Excavation of approximately 850 cubic yards (cy) of pesticide impacted soil; the anticipated surface disturbance associated with the environmental remediation (e.g., excavation, equipment staging areas, stabilized construction entrance, etc) will be less 1.2 acres;
- Transportation, treatment, and off-Site disposal of the 850 cy of pesticide impacted soil at a permitted and approved landfill;
- Backfilling of the excavation area; and
- Restoration of the Site to include installation of grassed vegetation to stabilize disturbed soil. The Site will be restored in-kind (i.e., the Site will be graded to match the existing conditions and re-vegetated with grass).

In addition to the removal action, ERD technology will be implemented to address VOCs in groundwater. An emulsified vegetable oil (EVO) solution will be prepared and injected into the subsurface via six direct-push borings equally spaced across two transects aligned perpendicular to groundwater flow. Approximately 21,150 gallons of EVO solution will be injected into the direct-push borings.

The final component of this design will include the enhancement and maintenance of existing LUCs and LTM of groundwater.

3.2 Pre-Removal Action Activities

The following subsections discuss the activities completed prior to mobilization; they include the following: permitting, monitoring well abandonment, utility clearance, and analytical analysis.

3.2.1 Permitting

The implementation of the removal action is being conducted under CERCLA; therefore, per Section 300.400(e) of the NCP, 40 CFR Section 300.400(e), no federal, state, or local permits are required for on-Site response actions provided that the substantive requirements of these permits are met. Completed permit applications have been included within **Appendix C** to document that the substantive requirements of the necessary permits are being met. **Appendix C** contains the following:

- Erosion and Sediment Control Plan (E&SC); and
- Stormwater Management Waiver Application.

The above referenced plans have been written in accordance with the Maryland Stormwater Management Guidelines for State and Federal Projects (MDE, 2010a) and the Maryland Erosion and Sediment Control Guidelines for State and Federal Projects (MDE, 2004). A copy of the Permit Equivalency Package is being submitted to MDE for concurrent review and approval.

In addition to the above permitting requirements, the Clean Air Act and amendments is also applicable to the proposed work as FGGM is located within a nonattainment area for particulate matter less than or equal to 2.5 microns in diameter (PM2.5) and ozone. Therefore, in accordance with 40 CFR 93.153 and 93.158, emissions of ozone precursor compounds nitrogen oxide (NOx) and VOCs and PM2.5 and PM2.5 precursor compounds (sulfur dioxide and NOx) are analyzed in a General Conformity analysis. This analysis is presented in **Appendix D**. Anticipated emission sources include on-Site equipment (bull dozers and excavators) pickup trucks (both on and off Site) and dump trucks used to transport waste and clean fill to and from the Site. No stationary sources such as a generator or soil screener are anticipated. Based on the calculations in **Appendix D**, the anticipated emissions are below the general conformity thresholds of 100 tons per year; therefore, no further action is required. Also the air emissions related to construction activity are an exempt source category per Maryland regulation so no air quality permit would be required for the project.

3.2.2 Monitoring Well Abandonment

Groundwater monitoring well MW-2R is located within the proposed excavation area. MW-2R will be abandoned prior to initiation of intrusive work. Well abandonment will be conducted by a Maryland certified well driller in accordance with the Well

Construction Regulations, COMAR 26.04.04, Abandonment Standards11. Upon completion of Site restoration, MW-2R will be reinstalled at its former location and completed within a flush mount manhole to minimize interference with future Site use. Section 7.1 discusses the reinstallation of MW-2R (e.g., depth, screen interval, installation methods).

3.2.3 Utility Clearance and Modification of Underground Utilities

Prior to initiation of intrusive activities, a utility clearance using at least three lines of evidence will be conducted. First, Miss Utility of Maryland will be contacted at least 48 hours in advance of land disturbance. Second, a private utility locator will locate and mark underground utilities within the excavation area and surrounding areas using a combination of ground penetrating radar and electromagnetic location methods. Finally, available Site plans will be reviewed to identify existing utilities within the Site. In addition, the FGGM dig permit will be submitted 30 days prior to initiation of the intrusive activities. Maryland Miss Utility Locate tickets will be updated every 10 days or as necessary. A record of the utility location efforts will be maintained by the ARCADIS construction manager.

Underground utilities were identified within the excavation area during pre-design activities and will require reconfiguration prior to removal activities. As depicted in **Appendix A** (Drawing # 2), an east/west oriented underground electric and water utility traverses the excavation. It was determined that these utilities formerly serviced a small dog kennel located west of the Site. Furthermore, it was determined that the dog kennel is no longer operational and the utilities are no longer in use. Prior to commencing intrusive activities, the above mentioned utilities will be decommissioned at their entrance to the Site along the east limit of disturbance.

3.2.4 Analytical Testing of Common Borrow and Topsoil

The common borrow and topsoil will be certified clean fill and will also be analyzed prior to approval for use as backfill material and soil cover. Analytical testing will be conducted to ensure that the common borrow and topsoil are suitable for use as a clean fill. The topsoil will also be analyzed for agricultural properties to ensure that it is suitable to support vegetative growth. One sample from each proposed source location will be analyzed for the following:

- Organic Content (only for topsoil);

- Agricultural Soil Test (only for topsoil);
- VOCs (USEPA Method 8260);
- Semi-Volatile Organic Compounds (USEPA Method 8270);
- Target Analyte List Metals(USEPA Method 6010B);
- Pesticides/Herbicides (USEPA Method 8081A); and
- Polychlorinated biphenyls (USEPA Method 8082B).

Results of the analysis will be compared to the USEPA Region III Risk-Based Criteria for Residential Soils. Common borrow will be sourced from the stockpiles at the FGGM Closed Sanitary Landfill (CSL). The topsoil source is yet to be identified but will be from an off-Site source (the topsoil at CSL will not be used).

3.2.5 Additional Pre-Construction Coordination

ARCADIS will coordinate with the Army to facilitate the following pre-construction activities prior to Site mobilization:

- Notification of DES: The Site is located adjacent to FGGM's DES facility which supports installation police, fire, and emergency medical response teams. ARCADIS will communicate pertinent project details including trucking routes and schedule to the Army for DES to minimize potential impacts to DES operations.
- Access to Arts and Crafts Center parking Lot: A small parking lot is located directly south of the proposed Site exit. The parking lot is comprised of approximately 25 spaces and supports patrons of the adjacent Arts and Crafts Center. For the duration of the removal action, parking in this area will be prohibited between 0700-1800 hours to eliminate the potential hazard associated with trucks entering the roadway in this area (e.g., collisions, pedestrians in roadway, etc.). Additional parking for the Arts and Crafts Center is located along York Avenue. ARCADIS will coordinate with the FGGM Directorate of Public Works to restrict parking at the Gordon Street parking lot during the soil removal action.
- Removal of equipment staged on Site: The Site is currently used to stage equipment used for landscaping and miscellaneous operations at FGGM.

ARCADIS will coordinate with the Army for removal of these items prior to conducting excavation activities. Specifically, all equipment and temporary structures near the excavation area and access road will require relocation and/or removal during the removal action.

3.3 Site Layout, Control, and Decontamination

This subsection describes in which manner ARCADIS shall maintain a controlled work site. The activities or requirements set forth in this section will be applicable to all aspects of the Site remediation action.

3.3.1 Site Controls and Access

The site layout will be established as part of the site preparation activities and will be accomplished using various site controls to include installation of survey stakes and/or flags to delineate the limits of excavation, limits of disturbance, and work zones. The goals of site controls are to prevent access to project areas by unauthorized persons, identify and delineate the various locations within the project area and manage flow of activity within and between various work locations. The following areas shall be established prior to initiation of excavation activities:

- Limits of disturbance;
- Staging areas for equipment, materials, and waste;
- Locations for the loading and unloading of materials; and
- Limits of the excavation.

Establishment of the exclusion zone, contaminant reduction zone, and the support zone is discussed in Section 3.3.3.

All work associated with the Site will be limited to these areas to minimize the footprint of disturbance. Site preparation will be conducted in accordance with the construction drawings presented within **Appendix A** (Drawing # 4). Two stabilized construction entrances are proposed to provide access to the excavation area. The stabilized construction entrances will be placed along Taylor Avenue and Gordon Street. The existing chain linked fencing will be utilized to prohibit unauthorized entrance to the Site.

Upon completion of the Site work, the stabilized construction entrances will be removed. The stone and geotextile material used to construct these temporary features will be disposed of within a permitted landfill or taken to CSL with the Army's approval. The Site will then be restored with grass in accordance with the E&SC Plan. Damage to the Site will be repaired in kind.

3.3.2 Tree Removal

Multiple small trees are located adjacent to the excavation area on the eastern portion of the Site. The trees are less than 6-inches in diameter and approximately 15 ft tall. Two trees have been identified within and/or near the limits of excavation. Trees along the limits of excavation will be protected to the extent practicable; however, trees within the excavation area will be removed.

3.3.3 Exclusion, Contaminant-Reduction, and Support Zones

Establishing suitable work zones will be necessary to limit the potential for exposure of workers to contamination, protect the public and surrounding environment from site hazards, and prevent unauthorized entry into the work area. To accomplish these goals, the Site will be divided into the following three zones: Support Zone, Contamination-Reduction Zone, and an Exclusion Zone. The location of the Support Zone will be established to allow access to the Contamination-Reduction Zone, to reduce traffic flow in the Contamination-Reduction Zone, and reduce potential exposures to site hazards. Excavation activities will commence only after preparation of the Contamination-Reduction and Support Zone.

The Support Zone will contain the Site access road, portable toilets, potable water, and supplies. All traffic entering and leaving the Site will pass through this zone. Access to the Support Zone will be restricted to individuals involved with the project. Access to the Contaminant-Reduction Zone and Exclusion Zone will be limited to project personnel with the requisite training (e.g., 40-hour training with current 8-hour refresher). In addition, truck drivers delivering fill material and transporting impacted materials off-Site will also be permitted within the Contaminant-Reduction Zone and Exclusion Zone. These individuals will be confined to the cab of their trucks and will not be permitted to exit the truck until they have entered the Support Zone.

A Contamination-Reduction Zone will be established between the Exclusion Zone and the Support Zone. Allowing the Contamination-Reduction Zone to be constructed next to the Support Zone enables the movement of equipment and personnel in and out of

the excavation area. Equipment and personnel decontamination activities will occur in this zone. An Exclusion Zone will be established beyond the perimeter of the proposed excavation area.

3.3.4 Surveying

Additional surveys are not anticipated in support of the soil removal. However, should survey control be necessary during the course of the remedial action, surveying will be performed by a registered surveyor licensed in the State of Maryland. Surveyed controls will be determined relative to the Maryland State Plane to the nearest 1.0 ft.

3.3.5 Decontamination

Due to the size and depth of the excavation, it is unlikely that heavy equipment will be required to enter the excavation to remove impacted soils. Any portion of the earth moving equipment coming in contact with waste material (e.g., excavator buckets) will be decontaminated using dry decontamination techniques. A temporary decontamination area will be designated in the field and will consistent of polyvinyl sheeting over the existing ground surface. The decontamination area will be utilized for dry decontamination of equipment and vehicles, such as the excavator boom and bucket and vehicle tires, in order to remove any excess materials at the conclusion of each day. Waste generated during the dry decontamination of equipment (e.g., the polyvinyl sheeting and impacted soil that may have been collected by it) will be disposed of with the impacted soil at an approved landfill.

3.4 Erosion and Sediment Controls and Stormwater Management Waiver

E&SC will be installed prior to initiation of earth disturbing activities in accordance with the E&SC plan presented within **Appendix C**. These E&SCs will remain in place and be maintained until vegetation has been established within the disturbed areas. Additional E&SCs may be added as determined by ARCADIS.

The environmental remediation at the Site will not result in the development or redevelopment of impervious areas. Therefore, a type 3.3.A Waiver under the Stormwater Management Guidelines for State and Federal Projects (MDE, 2010a) is being sought to perform environmental remediation (maintenance) activities at the Site. A stormwater management waiver application is included within **Appendix C**.

3.5 Excavation

The horizontal and vertical limits of excavation are depicted on the construction drawings within **Appendix A** (Drawing #5) and were determined through evaluation of pre-excavation sample results as discussed in Section 1.3. The maximum depth of excavation is established at 14 ft bgs, except within the vicinity of SB03A which will be advanced vertically to 16 ft bgs within a 5 ft radius of SB-03A. Vertical advancement of the excavation to a depth of 16 ft bgs within a 5 ft radius of SB-03A is contingent upon the groundwater elevation encountered during the remedy implementation and will not proceed below the groundwater table.

In general, the excavation will be terminated at 14 ft bgs because (1) the chlordane concentrations exhibit a marked decline after the 14 ft bgs interval within SB03A and (2) previous groundwater gauging of MW-2R indicates that the water table is approximately 16 ft bgs; and the decline in the SCL exceedances within the greater depths correlate to the soil/water table interface. If groundwater is encountered prior to reaching the planned excavation depth, then the excavation will be terminated at the groundwater interface.

Horizontal and vertical control of the excavation will be maintained using a combination of in-situ techniques including, but not limited to the following: reference to the existing alphanumeric grid and surveyed benchmark/reference locations, placement of wooden stakes and pin flags to demarcate the excavation grid and placement of batter and profile boards and the use of string and survey poles to measure excavation depths. Excavation implementation will utilize an iterative approach that excavates and disposes of soil in an order of precedence determined by the soils relative concentration of chlordane. Additional details pertaining to the excavation methodology is provided in the RD Addendum which is being provided under a separate cover.

As depicted on **Appendix A** – Drawing #3, there exist a 4-ft layer of soil exhibiting chlordane concentrations below the SCL of 16,210 µg/kg between 4 – 8 ft bgs at SB05 and SB06. The soil that are below the SCL at the 4 – 8 ft bgs interval will be temporary stockpiled on-site to allow for access and to continue excavation of the deeper impacted soils. This stockpiled soil will be analyzed for total chlordane to confirm that the chlordane concentrations within the stockpiled soil are below the SCL prior to its reuse as backfill following completion of the excavation. Soils will be stockpiled in a manner to eliminate contact with native soils.

The horizontal limits of the excavation as depicted within **Appendix A** (Drawing #5) are based upon sloping the excavation sidewalls with a 1:1 vertical/horizontal ratio. The approximate areal extent of the excavation area is 3,000 square feet with a volume of 850 cy.

The excavation shall be conducted in accordance with the regulations of 40 CFR 1926 Subpart P – Excavations. Further, the on-site excavation competent person will dictate the manner in which excavation stability and security will be employed during excavation, trenching, and backfill activities. The excavation competent person may utilize one or a combination of the following methods, as dictated by field conditions, to ensure excavation stability: benching of soils, sloping of soils, shoring, and/or shielding.

Excavation security will be maintained at all times during the excavation and backfill process. The excavation will be secured with high visibility orange safety fencing when the construction crew is not in direct line of site of the excavation (e.g., lunch breaks, conclusion of the work day). In addition to the orange safety fencing, the site is surrounded by an 8 ft chain link fence which may be utilized to enhance excavation security. ARCADIS will coordinate with the Army to close and lock the gates leading to the site during the duration of the excavation and backfill.

3.6 Dust Control

Dust control measures will be implemented to mitigate environmental and health risks posed by dust generated during earth disturbing activities. Potable water will be applied to the open excavation and/or staged material until the surface is moist. Water shall be applied at rates to preclude the generation of run-off. Potable water will be obtained from the hydrant on Taylor Avenue. A backflow preventer will be used to connect to the hydrant. Prior to using the hydrant, the backflow preventer will be inspected by American Water and a permit will be issued for use.

3.7 Air Monitoring

Based on a review of historical soil analytical data, the primary constituents in soil are: metals (arsenic) and pesticides (chlordane and heptachlor epoxide). Analytical data for these constituents were used to develop the air monitoring program to be implemented during the removal action (**Appendix E**). Air monitoring will be conducted to ensure the protection of on-Site worker health and safety. Metals and pesticides adhere to soil particles that could become airborne and be transported off-Site with the prevailing

wind. Therefore, airborne particulate action levels will be protective of any exposures to these constituents within soil.

The VOC data indicates that volatile emissions are not expected during intrusive Site activities and concentrations of VOCs in soil do not warrant continuous chemical monitoring. Therefore, no action level for chemical constituents will be established for air monitoring. However, a photo-ionization detector will be utilized to monitor the breathing zone to ensure worker protection.

The air monitoring program will include the following general components:

- On site monitoring for wind speed and direction using a wind sock; and
- Continuous monitoring within the work zone for particulates using a DataRAM to quantify the particulate dust concentration; logged data will be downloaded daily.

The action level for particulate monitoring within the work zone requiring the implementation of dust suppression measures are summarized in the table below:

Particulate Monitoring Action Levels	
Dust (mg/m^3)	**Action**
< 2.5	Continue Work
2.5 - 5.0	Use engineering controls, monitoring continuously
> 5.0	Use stop work authority, review controls, contact site safety officer

mg/m^3 – milligram per cubic meter

3.8 Transportation, Treatment, and Disposal

Excavated soil will be loaded into covered dump trucks and/or roll-offs and transported to a preapproved permitted disposal facility. Pre-characterization data and approval from the selected disposal facility will be obtained prior to transport of waste material.

Due to the concentration of chlordane within the soil, it is anticipated that a portion of the soil will require treatment prior to disposal to conform to the requirements of the land disposal restrictions. Therefore, the soil will be segregated within the excavation (i.e., impacted soils will not be stockpiled on Site) based upon the results of the additional in-situ waste characterization data to be collected and treated at the approved disposal facility accordingly. To the extent possible, segregation of the soil will be in-situ (i.e., the results of the additional waste characterization sampling will be

utilized to correlate soil grids and depth intervals with associated treatment and disposal options), thereby minimizing the necessity to stockpile segregated soils above ground.

A vehicle log denoting truck entrance and exit times will be maintained and will include each truck's identification number, driver identification, and the approximate volume of material hauled. A FGGM representative will review, approve, and sign the waste profiles and manifests prior to the transport of waste from the Site. The Site Manager will coordinate with the Army to obtain the appropriate number of manifests for each day's work.

Transportation of the excavated soils will be conducted in accordance with all applicable local, state, and federal regulations. In addition, all material transporters will be appropriately licensed, permitted, and in compliance with federal, state, and local regulations. The waste disposal contractor will submit copies of all manifests to FGGM representative for approval and signatures. Copies of the final waste manifests and weigh tickets will also be provided.

A Traffic Control Plan has been created to mitigate the potential hazards associated with the increased traffic resulting from the trucking of material to and from the Site. The anticipated number of trucks required to dispose of the 850 cy of waste and import fill material is approximately 45 to 50 trucks, respectively. Trucks are assumed to have an approximate capacity of 20 cy. The Traffic Control Plan specifies the physical (i.e. barriers) and administrative controls (e.g, speed limits or weather restrictions) to be utilized at the Site. In addition, the Traffic Control Plan includes a diagram of the proposed trucking ingress/egress route. The Traffic Control Plan is included as **Appendix F**.

3.9 Soil Conditioning and Excavation Dewatering

The terminal depth of the excavation is anticipated to be 14 ft bgs, approximately 2-3 ft above the groundwater table (approximately 16-17 ft bgs at MW-2R) thereby minimizing the potential for collection of groundwater within the excavation. Due to the short duration associated with excavation and backfill, the project will be sequenced to consider the short term weather forecast, to the extent practical, to minimize excavation and backfill operations during precipitation events. However, if inclement weather results in stormwater run-on within the excavation, saturated soil shall be conditioned sufficiently to remove excess water prior to load-out and transport. Soil conditioning may include one or a combination of the following techniques: (1) mixing

of dry soils from the excavation sidewall with saturated soils, (2) in-hole mixing of portland cement, (3) stockpiling soils within the excavation to allow soils to drain, and/or (4) mechanical dewatering of the excavation and containerizing the excavation water.

If mechanical dewatering of the excavation is necessary, then the excavation water will be handled in one of two manners (discussed below).

3.9.1.1 Excavation Water In Contact with Chlordane Impacted Soil Above the SCL

Excavation water that has been in contact with chlordane impacted soils above the SCL will be temporarily containerized, labeled, and sampled. If the results of the excavation water samples indicate that constituents within the excavation water are below MCLs or applicable Regional Screening Levels (RSLs), ARCADIS will request authorization from the Army to discharge directly to the ground surface if the following conditions are also met:

- It will not create a nuisance situation with day-to-day FGGM operational activities;
- It is not being discharged in an area where it will run into a natural (i.e., natural meaning not an engineered impoundment created for stormwater control) surface water body and/or sanitary sewer; and
- Containerized water will be pretreated with a filter sock prior to discharge.

If analytical data indicate excavation water contains contaminants above MCLs or RSLs, then two options for disposal are possible:

- Off-site disposal dependent on analytical results.
- Treat contaminated water using activated carbon and temporarily store. Pending analytical results post treatment, if below MCL (or RSL if applicable) concentrations, water can be discharged directly to the ground surface pending Army approval.

Excavation water not approved for discharge to ground surface will be analyzed for hazardous waste criteria in accordance with RCRA 40 CFR 261/COMAR 26.13. Excavation water categorized within these criteria will be disposed of through a licensed hazardous waste treatment storage and disposal facility. Containers will be

clearly marked “Hazardous Waste” and the following information must be included on the label: name and type of waste, USEPA hazardous waste code, the date and point of generation, and point of contact.

3.9.1.2 Excavation Water Not in Contact with Chlordane Impacted Soil

Water that is collected within the excavation but has not been in contact with soil with chlordane impacts above the SCL (e.g., excavation water from stormwater run-on during the backfill stage of work) will be removed from the excavation by pumping. Excavation water will be pre-treated for sediment load with a filter sock and then discharged to the drainage swale located immediately east of the Site.

3.10 Backfill and Site Grading

This section discusses the backfill and final grading requirements.

3.10.1 Common Borrow Backfill

Once the final vertical and horizontal excavation limits have been achieved, the Site shall be backfilled utilizing clean imported fill. Clean imported fill may be obtained from the CSL stockpile or from another approved source. Clean imported fill will be placed within the excavation area to achieve the existing grade (minus 6 inches to allow for placement of topsoil).

3.10.2 Vegetative Soil

A 6-inch topsoil layer will be placed above overburden/imported backfill. The vegetated soil cover will be placed in 6-inch loose lift and will be placed to meet the existing grade as depicted on the construction drawings in **Appendix A** (Drawing #2).

3.11 Demobilization and Site Restoration

Following completion of soil removal and backfill activities, site demobilization activities will be conducted. Demobilization will consist of equipment decontamination; site restoration activities; removal of all temporary work-related facilities, equipment, and materials; and final inspection of all work and restored areas. Areas disturbed as a result of construction activities will be restored to pre-construction conditions.

Restoration at the site will consist of removal of staging areas, temporary site controls, and seeding of disturbed areas. Any refuse, such as waste construction materials and personal protective equipment utilized during removal activities will be removed and properly disposed. A final site inspection will be conducted following the aforementioned activities.

4. Enhanced Reductive Dechlorination

4.1 Basis for Design

ERD by a microbially mediated in-situ reactive zone (IRZ) is an engineered bioremediation technique in which chlorinated volatile organic compounds (CVOCs) are degraded under anaerobic conditions through a series of transformations. ERD involves the injection of an easily degradable carbohydrate solution (e.g., food-grade molasses or emulsified vegetable oil) into the groundwater, which is metabolized by the naturally occurring bacteria in the subsurface. Consequently, the bacteria consume dissolved oxygen at a rate greater than it is recharged, creating an anaerobic environment. Following consumption of oxygen, the excess organic carbon initiates a succession of anaerobic processes, in which electron acceptors including nitrate, ferric iron, mangenic manganese, sulfate, and carbon dioxide are subsequently consumed by indigenous bacteria. Microbial utilization of such alternate electron acceptors creates electrochemically reducing conditions. Consequently, by maintaining excess organic carbon in the groundwater environment, ERD technology drives the groundwater environment to anaerobic and strongly reducing conditions.

The primary degradation pathway for this technology is shown below:

Tetrachloroethene →Trichloroethene →Dichloroethene →Vinyl Chloride → Ethene →Ethane →Carbon Dioxide

It is noted, however, that other biotic and abiotic degradation reactions may also occur, including but not limited to, hydrolysis and dihaloelimination.

The characteristics and extent of an IRZ established by ERD technology are generally determined by the effectiveness of delivering the carbon source to subsurface microbes. Three basic goals are targeted with the delivery of degradable organic carbon into a contaminated aquifer:

- <u>Overcome the natural recharge of electron acceptors</u>: This includes oxygen, nitrates and other electron acceptors that tend to support a more aerobic microbial community. As electron acceptors are used up, the environment will become more and more reducing. During this process, the ecology of the microbial community will adapt, encouraging proliferation of the types of bacteria that participate directly in dechlorination reactions.

- Stimulate fermentation and the production of molecular hydrogen: In the presence of excess organic carbon and a strongly reducing environment, fermenting bacteria will harvest energy by splitting organic compounds. This process liberates hydrogen. The process of fermentation also generates enzymes, cofactors, alcohols and other compounds that act as surfactants. This surfactant effect drives the dissolution of adsorbed mass, making it available for treatment (under natural conditions, the dissolution of hydrophobic organic contaminants such as chlorinated alkenes is very slow, allowing groundwater plumes to persist for many decades if the dissolution rate cannot be enhanced).

- Stimulate complete dechlorination of the target contaminants: Certain anaerobic bacteria can use the hydrogen, produced by fermenting bacteria, as an electron donor and the CVOCs as electron acceptors for respiration. The bacteria involved in these reactions are referred to as "dehalorespirers" which include bacterial species from several genera, including *Desulfuromonas*, *Dehalospirillum*, *Dehalococcoides*, *Dehalobacter*, and *Desulfomonile*. In this process, the hydrogen atoms are substituted for chlorine atoms, resulting in a step-wise chemical reduction of the CVOCs until they are completely converted to harmless end products.

4.1.1 Implementation of In-Situ Reactive Zone Barrier Using Emulsified Vegetable Oil

The carbon substrate to be used for the implementation of the IRZ in this case is EVO. EVO is an oil-in-water emulsion prepared by blending edible oils with emulsifying agents or surfactants. The emulsion is a smooth blend of small oil droplets suspended in water, resembling the texture of a half-and-half cream. As EVO is injected into the aquifer, the oil droplets migrate through soil pore spaces, interact with soil particles, and adhere onto surfaces. The soil particles are eventually coated with a thin layer of oil droplets that provides carbon source for long-term reductive dechlorination. EVO was selected as a carbon source, because it is a slower release/longer term carbon source than soluble substrates like molasses, lactate, and ethanol. The primary benefit of using EVO is that less frequent injections will likely be required due to its longer residence time and slow release of organic carbon (typically a year or more). However, during the first injection, additional soluble donor in the form of molasses will also be mixed with the EVO. The soluble donor will act as a carbon source to rapidly stimulates the microbial population and reduce the timeframe required to develop an IRZ using just EVO. Subsequent injections, if needed, would only inject EVO as the IRZ will be fully developed.

EVO solution will be injected into the subsurface via direct-push borings along two transects perpendicular to groundwater flow (**Figure 4**). The injection points will be configured to target source area treatment and to create an IRZ. As groundwater flows through the reactive zones, the trapped oil droplets dissolve and provide a carbon and energy source for anaerobic biodegradation processes.

4.2 In-Situ Reactive Zone Design

4.2.1 Design Parameters

The design of an IRZ requires a comprehensive understanding of the target treatment zone hydrogeology and flow regime. The hydrogeology at the Site has been evaluated through development of the conceptual site model detailed in the FFS (ARCADIS, 2012). In general, groundwater at the Site is located at approximately 18 to 20 ft bgs (MW-2R and MW-3R) in a surficial aquifer composed of fine to medium grained sands. This sand layer extends to approximately 30 ft bgs above a confining clay layer. Groundwater flow is generally to the east-southeast. The following site-specific parameters will be confirmed to aid in full-scale implementation:

- The mobile porosity (the percent of interconnected pore space providing groundwater flow) of the unconfined groundwater-bearing zone;
- The volume of fluid required to develop the design radius of influence around each injection point;
- Connectivity of the injection point to downgradient monitoring points;
- Vertical conductivity within the treatment area; and,
- Working injection pressure and injection rate.

Implementation of the EVO injection will be completed in two phases in a single mobilization. The first phase will serve as a brief injection test to confirm the site-specific parameters. During the first phase, an EVO injection will be initiated at one point with dose response monitoring to finalize the design parameters necessary to successfully implement the full-scale EVO injection. Dose response monitoring will consist of visual inspection of EVO arrival at monitoring points as well as collection of conductivity data. Once dose response is achieved, the final design parameters will be calculated in the field and applied to the full-scale injection event (Phase 2).

The target injection volume, $V_{injection}$, necessary to achieve full reagent breakthrough at the targeted injection radius of 10 ft is estimated using the following equation, based on the volume of a cylinder:

$$V_{injection} = z*\pi*r^{2*}N_m*7.48$$

Where:

$V_{injection}$ = Required injection volume

z = Saturated injection interval (15 ft)

r = Target radius of influence (10 ft)

N_m= Mobile porosity of soils (10 percent [%])

7.48 = conversion factor (gallons per cubic foot)

Based upon these assumptions, the estimated volume of solution is 3,525 gallons for each injection point, or a total of 21,150 gallons for six injection points. The number of injection points and estimated injection volumes may be refined following Phase 1 of implementation. Based on field observations (e.g., subsurface lithology, soil classification, etc.), volumes and injection point spacing may be adjusted to ensure delivery across the target area.

4.2.2 Injection Solution

The selected remedial action is a focused in-situ treatment for the area surrounding monitoring well MW-2R, and encompasses the area where the highest COC concentrations have been identified. The vertical treatment zone is between approximately 15 to 30 ft bgs. The proposed injection transects are displayed on **Figure 4**.

The EVO substrate selected for the full-scale implementation will be Remediation Natural Attenuation Services, Inc. Newman Zone EVO. The concentrated EVO substrate contains approximately 50% oil by volume and 4% lactate by weight. Lactate is soluble carbon substrate that is a readily available carbon source. The emulsion droplet size is between 0.3 and 0.4 microns. The droplet size is approximately 3 orders of magnitude smaller than a typical soil pore size. The small droplet size avoids

the problem of clogging and reduced soil permeability due to coalescence of the droplets. The substrate also contains 1% sodium bicarbonate by weight and its pH is between 8 and 9. Due to the low alkalinity (~ 80 milligrams per/liter) of the site groundwater, the buffering capacity provided by the EVO substrate is beneficial in counteracting the possible transient pH effects due to fatty acid production from fermentation processes. This helps in providing a stable environment for the proliferation of bacteria. The EVO substrate also contains a non-ionic surfactant to stabilize the emulsion. The concentrated substrate will be diluted using potable water to prepare an injection solution containing approximately 2% to 3% oil by volume. The specifications of the Newman Zone EVO substrate are provided in **Appendix G**.

In addition to the Newman Zone EVO, additional soluble donor in the form of dilute molasses will be added to the injection solution. Molasses will be mixed into the injection solution for the first injection only, and at a concentration of approximately 1% by weight. The soluble donor acts as a carbon source that rapidly stimulates the microbial population and reduces the timeframe required to develop an IRZ using just EVO. Subsequent injections, if needed, would only inject EVO as the IRZ will be fully developed.

4.3 In-Situ Reactive Zone Implementation

4.3.1 Permitting

Because environmental response activities at the site are being conducted under the CERCLA program, it is required that aspects of the remediation comply with the substantive components of state and local permits. However, in an effort to expedite the remediation of sites, the CERCLA program does not require that the actual permits be obtained. The remedial actions will be in accordance with substantive requirements of MDE regulations and ARARs that must be met. These include the following:

- Well Permits – Well permits will be completed for each of the monitoring wells installed as part of this remedial action.

- Underground Injection Control Permit – IRZ injections will meet the requirements for Class V injection wells.

4.3.2 Utility Clearance

Prior to initiation of intrusive activities, a utility clearance using at least three lines of evidence will be conducted. First, Miss Utility of Maryland will be contacted at least 48 hours in advance of land disturbance. Second, a private utility locator will locate and mark underground utilities within the excavation area and surrounding areas. Finally, available Site plans will be reviewed to identify existing utilities within the Site. In addition, the FGGM dig permit will be submitted 30 days prior to initiation of the intrusive activities. Maryland Miss Utility Locate tickets will be updated every 10 days or as necessary.

The proposed locations for the direct push transects shown on **Figure 4** will be finalized and marked in the field following the utility locating.

4.3.3 Injection Methodology

The injection will be completed using DPT. During the injection event, the direct push drill bit will be advanced to the appropriate depth bgs depending on the water table elevation. Each injection point will consist of multiple 5-ft vertical intervals to establish coverage across the targeted vertical zone extending 15 to 30 ft bgs...

4.3.4 Injection Solution Mixing and Distribution Infrastructure

Injections will be performed using a temporary central mixing and injection system. Therefore, no permanent injection solution mixing and distributing infrastructure will be needed. Injection mixing infrastructure will be field determined based on existing site conditions and the equipment utilized**.** The injection system will be located in a manner as to minimize FGGM operations. The injection solution will be distributed via above grade hose/pipe to each injection point. Secondary containment will be utilized at the mixing area and each manifold location.

4.3.5 Water Supply for Injection Solution Mixing

Injection water will be obtained from a fire hydrant on the west side of Taylor Avenue located west of the Site. A water hose will be connected to the hydrant and run above grade to the mixing system. Because the water line will be run across Taylor Avenue, appropriate measures will be taken to ensure the water line is protected from damage or puncture. These measures will likely include utilizing pipe channels across Taylor

Avenue to allow continuous use of the road and water line. Utilizing pipe channels would also require posting appropriate signage and traffic control measures.

4.3.6 Injection Test

EVO does not readily move down-gradient with groundwater flow. Instead EVO distribution is primarily achieved at the time of injection, and it serves as an on-going slow-release carbon source across the achieved injection radius. As a result, it is important to determine the achieved radius of influence from a given volume of injected material to confirm design parameters prior to full-scale injection. To this end, the Phase 1 injection test will be completed to gather sufficient data to determine the achieved radius of influence leading to optimize injection spacing. Existing monitoring wells will be utilized during the Phase 1 injection to confirm the volume required to achieve the targeted radius of influence. Phase 1 testing, will be completed as follows:

- EVO solution will be applied at a direct-push location in transect 1.
- Approximately 3,525 gallons (1,175 gallons per 5 ft section) of a 2.5% (by weight) EVO and 1% (by weight) soluble donor to water solution will be injected at the proposed direct-push location across the upper 15 ft of the shallow aquifer.
- EVO solution distribution will be evaluated using several methods including visual observations and field measurements (electrical conductivity).
    - Visual Observations: EVO is milky in color and as a result should be readily identifiable by visual observation of collected groundwater. To calibrate these visual observations standards of various strengths will be produced in the field and serve as a measuring point for this visual test. For example, the 2.5% EVO/water solution will serve as the 100% EVO standard, and this will be further diluted by adding distilled water to achieve a 75%, 50%, 25%, 10%, and 5% standards.
    - Electrical Conductivity Tracer Test: Electrical Conductivity measurements will be taken from downgradient monitoring wells.

4.3.7 Injection System Operation

The data collected during the injection test will be utilized to finalize injection volumes and injection point spacing. The initial volumes and spacing identified in section 4.2.1 may be revised slightly based upon the testing data.

One injection event is planned for the IRZ system. Additional injections will be conducted after two years, as necessary, if COC degradation is less than anticipated. All field activities associated with ERD injection system operations will be conducted in accordance with the FGGM site-wide HASP (ACRCADIS, 2010b) and the activity specific HASP addendum included in **Appendix H**.

4.3.8 Performance Monitoring

Performance monitoring as described in Section 7.3 will be conducted to meet the following objectives:

- Ensure optimum IRZ operation and to identify the IRZ termination point by collecting operational data.
- Operate the IRZ system until site-specific natural attenuation action levels (NAALs), as discussed below, are attained and monitored natural attenuation can achieve RAOs independent of continued IRZ operation.
- Assess trends in VOC concentrations in performance monitoring wells to ensure that the IRZ system is providing VOC treatment as expected.

4.3.9 In-Situ Reactive Zone Shut-off Criteria

Chlorinated ethene natural attenuation processes include volatilization, dilution, sorption, and biodegradation. These processes are collectively characterized as proceeding as a first-order decay in dissolved-phase concentrations. The natural attenuation rates, the distance of each IRZ treatment line from the IRZ performance monitoring location, and the chemical-specific cleanup goal are used to calculate a series of NAALs for each chlorinated ethene at a specific location (specific IRZ treatment line). These NAALs represent the maximum concentration for each constituent that can be observed at an IRZ treatment line prior to ceasing injections at that specific injection location. Pre-IRZ implementation groundwater concentration data (MW-2R and MW-6) was evaluated to determine preliminary first order natural

attenuation rates for design purposes. Based on the evaluation of natural attenuation rates, the chlorinated ethene concentrations remaining in groundwater following shutoff of a given IRZ treatment line are expected to undergo natural attenuation and achieve chemical-specific cleanup goals at the performance monitoring location without additional active treatment.

Monitoring well MW-2R and MW-9 will be used to confirm the preliminary NAALs for each chlorinated ethene following completion of injection operations. LUCs will be put in place to restrict the use of the site until the Site groundwater achieves SCLs.

The equation used to calculate the NAAL is as follows

$$C = C_0 * e^{-kt}$$

Where:

C = The NAAL concentration

C_0 = The concentration remaining following IRZ treatment

-k = The decay rate constant calculated from performance monitoring data

t = The travel time between MW-2R and the property boundary

5. Land Use Controls

In addition to the active components of the remedial action (i.e., excavation and chemical injections), existing LUCs, including institutional controls (ICs) and engineering controls (ECs), at FGGM 13 will be maintained and enhanced. ICs are administrative measures put in place to restrict human activity, in order to control future land use. ECs include a variety of engineered or constructed barriers to control human activity and restrict groundwater use. The LUC boundaries for the Site are shown on **Figure 5**.

5.1 Existing LUCs at FGGM 13

The following LUCs are already in place at FGGM:

- **Master Plan Regulations, Army Regulation (AR) 210-20**: The Army issued Master Planning for Army Installations, AR 210-20, on 16 May 2005 updating an earlier regulation dated 13 July 1987. AR 210-20 "establishes the requirement for an Installation Master Plan and planning board and specifies procedures for developing, submitting for approval, updating, and implementing the Installation Master Plan." This regulation provides for comprehensive planning at Army installations and not only allows, but requires incorporation of existing land-use and conditions into the Master Plan. The master plan regulations provide a framework for comprehensive planning through the use of component plans, which include, but are not limited to, the following: Natural Resources Plan, Environmental Protection Plan, Installation Layout Vicinity Plan, Land-use Plan, and Future Development Plan.

  The overall objective is to provide each installation with a master plan through the integration of each component plan into the Installation Master Plan. The component plans form a series of narrative, tabular, and graphic plans. Their integration into an Installation Master Plan provides many benefits as outlined in AR 210-20, including "the mechanism for ensuring that installation projects are sited to meet operational, safety, physical security, and environmental requirements."

- **FGGM Geographical Information System (GIS) Database:** FGGM maintains a comprehensive installation-wide GIS database. The database includes descriptions of existing land and environmental restrictions, locations of known contamination, and locations of Munitions Response Areas / Munitions Response Sites. This information will allow future end-users and tenants of FGGM to make rapid and accurate inquiries regarding sites within FGGM and will specify the LUCs in-place at specific locations. Existing wells, chemical contamination, building

restrictions, Munitions and Explosives of Concern concerns, and many other lines of inquiry will quickly be available to support the decision making process.

- **FGGM Access Regulations**: Access regulations and controls are in place at FGGM, including identification checks and vehicle inspections. Trespassing and unauthorized activities on FGGM are illegal.
- **Army Military Construction Program Development and Execution**: AR 415-15 outlines pre-construction environmental survey procedures. Prior to construction activities, the Army categorizes the proposed construction site based on an environmental survey. Under this regulation, the Army must determine wetland status of the site, historical significance, and endangered species habitat identification.
- **FGGM Dig Permit Requirements**: The FGGM Directorate of Public Works requires a dig permit (Form #FGGM-DPW-1001) be submitted 30 days prior to initiation of intrusive activities at the Site. The dig permit application specifies the location and the type of intrusive work to be performed.

5.2 Land Use Control Implementation

Most of the required ICs are already in place as elements of required procedures at FGGM. These elements include requirements to obtain excavation permits from the Directorate of Public Works for any intrusive activity at FGGM; Master Plan Regulations; and the FGGM GIS Database. These ICs will be incorporated into CERCLA required procedures at FGGM 13. Residential land use at FGGM 13 will be prohibited as part of the LUCs. This prohibition will be added to the Installation Master Plan.

Signage will be installed as depicted on **Figure 5**. Signage will describe the restrictions of site use at key locations will be manufactured and installed in accordance with Technical Manual 5-807-10 – Signage.

Annual visual inspections will be performed to establish that all on-Site LUCs are in good condition and to confirm that the land use of the Site has not changed. LUCs will include a requirement for an evaluation of the potential for vapor intrusion in future buildings at FGGM 13 or the use of ECs to eliminate the vapor intrusion pathway.

The Army will be responsible for implementation, maintenance, periodic inspection, reporting on, and enforcement of LUCs in accordance with the ROD. Although the Army may transfer these responsibilities to another party by contract, property transfer agreement, or through other means, the Army will remain responsible for:

- Conducting CERCLA Section 121(c) five year reviews;
- Notifying USEPA and MDE and/or local government representatives of any known LUC deficiencies or violations;
- Obtaining access to the property to conduct periodic inspections and any necessary response; and
- Ensuring that the LUC objectives are met to protect the integrity of the selected remedy.

A land use control annual inspection checklist has been included as **Appendix I**.

6. Remedial Action Quality Assurance

This section sets forth the Construction Quality Assurance/Quality Control (CQA/QC) testing requirements. CQA/QC will be conducted on each of the major materials used as part of this Removal Action. CQA testing may be performed prior to construction, during construction, following construction, or any combination thereof, given the nature of material and the intent of the work. The major components include placement of imported fill in the excavation area and placement of a topsoil layer in previously vegetated areas that were disturbed during construction. Any samples collected for CQA/QC shall be conducted in accordance with the Site-Wide SAP (ARCADIS, 2011c) and procedures included herein.

6.1 Imported Fill

6.1.1 Pre-Construction

Imported fill shall be certified-clean consist of approved materials substantially free from organic materials, loam, wood debris, trash, roots, brush, gravel, and other objectionable materials, which may be compressible. Materials shall not be excessively wet or saturated. Imported fill shall not contain granite blocks, broken concrete, masonry rubble, or other similar materials.

6.1.2 Construction

- Imported fill shall be placed in 2-ft, or less, compacted lifts and tamped using mechanical means.
- Each lift of imported fill shall be compacted to a visual acceptable standard.
- The final grade of imported fill must be smooth and even.

6.1.3 Post-Construction

- No testing required.

6.2 Topsoil

6.2.1 Pre-Construction

Topsoil shall be certified-clean, consist of loose, friable, and loamy soil material (loam, sandy loam, silty loam, sandy clay loam, clay loam) and be free of debris, trash, stumps, rocks, roots, and weeds. Topsoil shall be able to support healthy vegetation and shall not contain substances that may be toxic to humans or plants. The topsoil provided shall have a pH range from 6.0 to 7.5. This pH shall be designated by the provider on the material certification sheet. Organic content shall not be less than 1.5% by weight. In addition, topsoil must meet the requirements established within the Maryland Standards and Specifications for Soil Erosion and Sediment Control (MDE, 2011).

6.2.2 Construction

- An additional sample of the topsoil will be collected if any change in the color, consistency or texture of the material is noted.

- The final grade of the topsoil layer must be smooth and even, and approved by the Construction Manager. The minimum topsoil layer thickness must be six-inches.

6.2.3 Post-Construction

- No testing required.

7. Long Term Monitoring and Maintenance

This section describes installation of monitoring well MW-9, post construction monitoring, and maintenance plan.

7.1 Monitoring Well Installation

This section discusses the installation of new monitoring well MW-9 and the reinstallation of MW-2R. In accordance with the ROD (U.S. Army, 2012), a new monitoring well (MW-9) is proposed for installation at the intersection of York and Gordon street. **Figure 6** depicts the existing monitoring well network and the proposed location for MW-9. In addition, MW-2R is to be abandoned in place prior to excavation of the impacted soil and then subsequently reinstalled during site restoration.

Monitoring wells MW-9 and MW-2R will be installed using hollow stem auger drilling methods by a Maryland-licensed driller in accordance with Maryland regulations. During drilling, split spoon samples will be collected every 5 ft using 2-ft spoons. All split-spoon samples will be logged by an ARCADIS geologist.

MW-9 will be installed to an approximate depth of 30 ft bgs and will be screened from the 20-30 ft bgs interval. MW-2R will be installed to a depth of 30 ft bgs and screened from the 20-30 ft bgs interval. Both wells will be constructed of 2-inch diameter, Schedule 40 polyvinyl chloride riser and 10 ft of 20-slot well screen. The well will be finished by filling the annulus with No. 2 sand filter pack to 2 ft above the top of the well screen, and at least 2 ft of low permeability bentonite seal will be placed in the annulus above the filter pack. The remaining annulus will be sealed with Portland cement/bentonite grout installed using a tremie pipe. The wells will be completed within a flush mount steel manhole with a locking cap.

Following installation, MW-9 and MW-2R will be developed by pumping and/or surging to remove fines or mud from the filter pack and borehole and establish a hydraulic connection between the surrounding formations. The locations, ground surface elevations, and top of casing elevations will be surveyed by a licensed surveyor.

7.2 Site Inspection, Maintenance, and Land Use Controls

Upon approval of this RD by USEPA and concurrence by MDE, Site inspections will commence on an annual basis to confirm continued compliance with all LUC

objectives. FGGM will maintain the records of these inspections, which will include the following:

- Evaluation of Land Use – The site will be inspected to ensure that current land use has been maintained and conditions are protective of human health and the environment.

- Well Inspections – All network injection wells and monitoring wells will be inspected for damage. Any necessary repairs will be noted and will be conducted promptly.

Documentation of these annual site inspections will be documented using the Land Use Certification form provided in **Appendix I**.

7.3 Long Term Monitoring and Performance Monitoring

The LTM program at FGGM 13 will consist of both compliance and performance monitoring. Compliance monitoring will be performed to monitor groundwater conditions to ensure that constituent concentrations continue to decrease at a rate sufficient to achieve the SCLs and groundwater specific RAOs. In accordance to the LTM program detailed in the ROD (U.S. Army, 2012), the scope of compliance monitoring will include the collection of groundwater samples to be analyzed for VOCs and pesticides. Following remedy implementation, compliance monitoring will be implemented according to the following schedule:

- Quarterly at all Site monitoring wells for one year (MW-1R, MW-2R, MW-3R, MW-4R, MW-5, MW-6, MW-7, MW-8, and MW-9);

- Semi-annually at select monitoring wells (monitoring wells to be determined after evaluation of the first year data) for two years; and

- Annually at select monitoring wells thereafter.

Following the first year of quarterly monitoring; groundwater results and data trends will be evaluated to refine the monitoring program. If needed, the duration and frequency of monitoring may be modified based upon evaluation of data collected and agreement by the Army, USEPA, and MDE. Groundwater sampling will be discontinued within each monitoring well as analyte concentrations drop below the SCL for two consecutive sampling rounds within the respective monitoring well. The requirements

for the cessation of LTM will be evaluated during the CERCLA five year review process.

In addition to compliance monitoring, performance monitoring will be conducted to track the groundwater chemistry and conditions necessary for ERD, as well as the degradation of COCs. Analyses conducted as part of performance monitoring include the collection of field parameters, TOC, pH, and dissolved gases (methane, ethane, and ethene). Performance monitoring will be conducted annually in conjunction with compliance monitoring. The LTM program summary including analytes and sample frequency for the Site is presented in **Table 5**.

.

8. Implementation Schedule

The removal action will commence in summer of 2013 pending USEPA and MDE approval of this RD. It is anticipated that the field components of the removal activities discussed in this report will be conducted over a two-week period.

Following completion of the removal action, ERD technology will be implemented to address VOCs in groundwater. LTM will commence following completion of chemical injections.

A proposed schedule is attached as **Figure 7**. The schedule illustrates the anticipated timeframes for conducting the individual components of the removal action as well as the subsequent components of the selected remedy. The estimated timeframes are subject to change based on actual dates.

9. Safety and Health

All work performed at the Site will be in accordance with the approved Site-Wide HASP (ARCADIS, 2010b) including the HASP addendum developed for chemical injections (**Appendix H**) and with ARCADIS internal health and safety procedures. All Site personnel, contractors, subcontractors, and site visitors shall be in compliance with the health and safety procedures established by the Site-Wide HASP and ARCADIS internal standard operating procedures.

10. References

ARCADIS U.S. Inc. (ARCADIS). 2010a. Waste Management Plan (WMP) for the Performance Based Acquisition at Fort George G. Meade. Final. October 2010.

ARCADIS. 2010b. Health and Safety Plan (HASP) for the Performance Based Acquisition at Fort George G. Meade. Final. October 2010.

ARCADIS. 2011a. Remedial Investigation, FGGM 13, Former Pesticide Shop, Fort George G. Meade, Maryland. May 2011.

ARCADIS. 2011b. Quality Assurance Project Plan for the Performance Based Acquisition at Fort George G. Meade. Final. March 2011.

ARCADIS. 2011c. Sample and Analysis Plan (SAP) for the Performance Based Acquisition at Fort George G. Meade. Final. March 2011.

ARCADIS. 2012. Focused Feasibility Study, FGGM 13 Former Pesticide Shop, Fort George G. Meade, Maryland. Final. July 2012.

ATKINS. 2011. Real Property Master Plan Digest for Fort George G. Meade, Maryland. October.

Maryland Department of the Environment (MDE). 2004. Maryland Erosion and Sediment Control Guidelines for State and Federal Projects. Water Management Administration. January.

MDE. 2010a. Maryland Stormwater Management Guidelines for State and Federal Projects. Water Management Administration. April 15.

MDE. 2011. Standards and Specifications for Soil Erosion and Sediment Control. Water Management Association with the Natural Resources Conservation Service and Maryland Association of Soil Conservation Districts. October.

NuTec Design Associates, Inc. and Dewberry & Davis. 1997. Comprehensive Site Assessment and Relative Risk Site Evaluation for the Military District of Washington's Defense Environmental Restoration Program, DSERTS Site No.

FGGM13, Fort George G. Meade Pesticide Shop (Building 6621), Final. 28 May 1997.

URS. 2007. Remedial Investigation for the Former Pesticide Shop, Building 6621, Fort George G. Meade Anne Arundel County, Maryland. Draft Final Report. July 2007.

U.S. Army. 2012. Record of Decision, FGGM 13 Former Pesticide Shop, Fort George G. Meade, Maryland. Final. September 2012.

Versar, Inc. (Versar). 2003. *Soil Investigation at Former Building 6621, Gordon Street and York Avenue, Ft. Meade, Maryland,* Versar Project No. 110941.00001.001. 31 October 2003.

Versar. 2004. *Soil Investigation at Former Building 6621, Gordon Street and York Avenue, Ft. Meade, Maryland,* Versar Project No. 110941.00001.002. 19 April 2004.

Tables

Table 1
Pre-Excavation Soil Sample Results - Pesticides
FGGM 13 Former Pesticide Shop, Building 6621
Fort George G. Meade, Maryland

Round 1:

		Location	SB-01	SB-01	SB-01	SB-02	SB-02	SB-02	SB-03	SB-03	SB-03	SB-04	SB-04	SB-04	SB-05	SB-05	SB-05	SB-06	SB-06	SB-06
		Sample Date	11/27/2012	11/27/2012	11/27/2012	11/28/2012	11/28/2012	11/28/2012	11/28/2012	11/28/2012	11/28/2012	11/27/2012	11/27/2012	11/27/2012	11/28/2012	11/28/2012	11/28/2012	11/27/2012	11/27/2012	11/27/2012
		Sample Depth (ft)	0-2	4-6	8-10	0-2	4-6	8-10	0-2	4-6	8-10	0-2	4-6	8-10	0-2	4-6	8-10	0-2	4-6	8-10
Analyte	**Site Cleanup Level (ug/kg)**	**Unit**																		
Chlordane	16,210	µg/kg	8,100 QLS	360 L	ND	**140,000 QL**	**120,000 QL**	**76,000 QL**	**1,100,000 QL**	**270,000 QL**	**480,000 QL**	6,000 L	2,600 QL	180 L	**38,000 QL**	5,400 QL	**110,000 QL**	**160,000 QL**	13,000 QL	**97,000 QL**
Heptachlor Epoxide	770	µg/kg	61 JQS	3.1 JP	ND	380 JPQ	200 JQ	ND	ND	600 JPQ	400 JQ	33 J	17 J	0.14 J	58 JPQ	8.2 JP	ND	410 JPQ	ND	ND

		Location	SB-07	SB-07	SB-07	SB-08	SB-08	SB-08	SB-09	SB-09	SB-09	SB-10	SB-10	SB-10	SB-11	SB-11	SB-11
		Sample Date	11/27/2012	11/27/2012	11/27/2012	11/27/2012	11/27/2012	11/27/2012	11/27/2012	11/27/2012	11/27/2012	11/27/2012	11/27/2012	11/27/2012	11/27/2012	11/27/2012	11/27/2012
		Sample Depth	0-2	4-6	8-10	0-2	4-6	8-10	0-2	4-6	8-10	0-2	4-6	8-10	0-2	4-6	8-10
Analyte	**Site Cleanup Level (ug/kg)**	**Unit**															
Chlordane	16,210	µg/kg	710 QL	3,400 QL	250 L	**21,000 QL**	560 L	740 L	**110,000 QL**	610 L	10,000 QL	51 L	62	69 L	27	49	ND
Heptachlor Epoxide	770	µg/kg	2.7 J	7.7 JQ	ND	ND	5.4 J	ND	320 JPQ	1.8 J	25 JPQ	1.4 J	0.54 JS	0.75 J	66 J	0.51 J	ND

Round 2:

		Location	SB-03A	SB-03A	SB-03A	SB-03A	SB-12	SB-12	SB-13	SB-13	SB-14	SB-14	SB-15	SB-15	SB-16	SB-16	SB-17	SB-18	SB-23	SB-24	SB-24
		Sample Date	1/29/2013	1/29/2013	1/29/2013	1/29/2013	1/29/2013	1/29/2013	1/29/2013	1/29/2013	1/29/2013	1/29/2013	1/29/2013	1/29/2013	1/29/2013	1/29/2013	1/29/2013	1/29//2013	1/29/2013	1/29/2013	1/29/2013
		Sample Depth	10-12	12-14	14-16	16-18	0-2	4-6	0-2	4-6	0-2	4-6	0-2	4-6	0-2	4-6	0-2	0-2	0-2	0-2	4-6
Analyte	**Site Cleanup Level (ug/kg)**	**Unit**																			
Chlordane	16,210	µg/kg	**90,000**	**29,000 QL**	14,000 L	**21,000 L**	3700	ND	900	220	48	2.8 J	400	23	47 S	ND	500 Q	380	3,100	**35000 Q**	63 PQL
Heptachlor Epoxide	770	µg/kg	100 JP	79 JPQ	ND	59 JP	29	0.52 J	15	0.60 J	1.1 J	ND	5.9	0.13 J	1.0 J	ND	3.7	3.2	19	100 JQ	0.20 JQ

Round 3:

		Location	SB-12A	SB-13A	SB-15A	SB-16A
		Sample Date	6/18/2013	6/17/2013	6/17/2013	6/17/2013
		Sample Depth	8-10	8-10	8-10	8-10
Analyte	**Site Cleanup Level (ug/kg)**	**Unit**				
Chlordane	16,210	µg/kg	83	180 QL	53	290 QL
Heptachlor Epoxide	770	µg/kg	0.39 JPQ	0.56 JPQ	0.53 JQ	ND

Notes:
Values exceeding the applicable site cleanup level are boldfaced and shaded.
1. Pesticide Shop Site Cleanup Levels (SCLs) are based on Preliminary Remediation Goals as detailed in the Record of Decision (ARCADIS, 2012).
'---' - not available
µg/kg - microgram per kilogram
ft - feet
ND - Non Detect
J - Indicates an estimated result. Result is less than laboratory reporting limits.
P - The relative percent difference between the two gas chromatography columns exceeds 40%
Q - Surrogate failure
L - laboratory control samples/laboratory control sample duplicate failure
S - matrix spike/matrix spike duplicate

Table 2
Pre-Excavation Soil Sample Results - VOC Detections
FGGM 13 Former Pesticide Shop, Building 6621
Fort George G. Meade, Maryland

Location	Soil Residential RSL (mg/kg)	Soil Industrial RSL (mg/kg)	SB-03	SB-05	SB-05	SB-05	SB-06
Sample Date			11/28/2012	11/28/2012	11/28/2012	11/28/2012	11/28/2012
Sample Depth (ft)			10-11	0-2	4-3	8-10	9-10
Analyte (mg/kg)							
1,2,4-Trichlorobenzene	22	99	--	0.0061	--	--	--
1,2,4-Trimethylbenzene	62	260	11 BWQ	--	--	--	0.057 W
1,2-Dichlorobenzene	1900	9800	0.00073 WJ	--	--	--	--
1,3,5-Trimethylbenzene	780	10000	8.4 BWQ	--	--	--	0.029 W
1,3-Dichlorobenzene	NA	NA	0.00056 WJ	--	--	--	--
1,4-Dichlorobenzene	2.4	12	--	--	0.00053 J	--	--
2-Phenylbutane	NA	NA	0.037 W	--	--	--	0.0021 WJ
4-Methyl-2-Pentanone	5300	53000	--	--	--	0.0016 J	--
Acetone	61000	630000	0.022 BW	0.0046 BJ	0.0077 BJ	0.025 B	0.021 BW
Benzene	1.1	5.4	--	--	--	--	0.00028 WJ
Carbon Disulfide	820	3700	0.0011 WJ	--	--	--	0.00041 WJ
Chlorobenzene	290	1400	0.013 W	--	--	--	0.0010 WJ
Cymene	NA	NA	0.1 W	--	--	--	0.015 W
Dichloromethane	NA	NA	0.00055 BWJ	0.00066 BJ	0.00057 BJ	0.00075 BJ	0.00056 BWJ
Ethylbenzene	5.4	27	0.0028 WJ	--	--	--	--
Isopropylbenzene	NA	NA	0.015 W	--	--	--	0.00077 WJ
Methylcyclohexane	NA	NA	0.028 W	--	--	--	0.00065 WJ
m-Xylene	590	2500	0.0073 W	--	--	0.0013 J	0.0012 WJ
Naphthalene	3.6	18	0.025 BW	0.0052 BJ	0.0048 BJ	0.0056 BJ	0.014 BW
N-Propylbenzene	3400	21000	0.051 W	--	--	--	0.0024 WJ
o-Xylene	690	3000	0.015 W	--	--	--	0.0016 WJ
Tert-Butylbenzene	3900	51000	0.076 W	--	--	--	--
Tetrachloroethene	22	110	14 BWQ	0.0056 J	0.0046 J	0.0054 J	0.043 W
Toluene	5000	45000	--	0.00045 J	--	0.00045 J	--
Total Xylenes	NA	NA	0.023 W	--	--	0.0013 J	0.0028 WJ
Trichloroethene	.91	6.4	--	--	--	--	0.00051 WJ

Notes:
1. Where applicable, all soil sample analysis are reported on a dry weight basis unless flagged with a "W".
'---' - Not Detected
NA - Not Available
mg/kg - milligram per kilogram
ft - feet
VOC - volatile organic compound
B - Analyte detected in the method blank.
J - Indicates an estimated result. Result is less than laboratory reporting limits.
L - laboratory control samples/laboratory control sample duplicate failure
P - The relative percent difference between the two gas chromatography columns exceeds 40%
Q - Surrogate failure
S - matrix spike/matrix spike duplicate
U - Indicates the analyte was analyzed but not detected above the detection limit.
W - All soil samples were reported on a dry weight basis, unless noted with a "W" for "wet" weight

Table 3
Waste Characterization Sampling Results
FGGM 13 Former Pesticide Shop, Building 6621
Fort George G. Meade, Maryland

				Location	WC	WC-01	WC-02
				Sample Date	11/28/2012	2/18/2013	2/18/2013
Analyte	**Preparation Method**	**Analytical Method**	**TCLP Threshold Limit**	**Unit**			
2,4-D	1311/8151A	8151A	10	mg/L	0.031	---	---
gamma - BHC (Lindane)	1311/3520C	8081B	0.4	mg/L	0.0068	0.0034	0.0026
Chlordane	1311/3520C	8081B	0.03	mg/L	**0.097**	**0.085 S**	0.021
Endrin	1311/3520C	8081B	0.02	mg/L	0.0010 JP	---	---
Heptachlor	1311/3520C	8081B	0.008	mg/L	0.0016 JP	0.0010 J	0.00030 J
Heptachlor epoxide	1311/3520C	8081B	0.008	mg/L	0.00060 J	0.00050 JP	---
Arsenic	1311/3010A	6010C	5	mg/L	---	0.024 J	0.033 J
Barium	1311/3010A	6010C	100	mg/L	0.5	0.41 B	0.33
Lead	1311/3010A	6010C	5	mg/L	---	---	0.029 J
Mercury	1311/7470A	7470A	0.2	mg/L	---	---	0.00012 J
Selenium	1311/3010A	6010C	1	mg/L	0.065 J	0.032 J	---

Notes:
Values exceeding the toxicity characteristic leaching procedure (TCLP) Threshold Limit are bolded.
'---' - non detect
mg/L - milligram per liter
B - Detected in method blank
J - Indicates an estimated result. Result is less than laboratory reporting limits.
P - The relative percent difference between the two gas chromatography columns exceeds 40%
S - matrix spike/matrix spike duplicate

Table 4
June 2013 Supplemental Waste Characterization Results
FGGM 13 Former Pesticide Shop, Building 6621
Fort George G. Meade, Maryland

SB-02			Location	SB02-COMP(0-4)	SB02-1A(0-4)	SB02-2A(0-4)	SB02-1B(0-4)	SB02-2B(0-4)	SB02-COMP(4-8)	SB02-1A(4-8)	SB02-2A(4-8)	SB02-1B(4-8)	SB02-2B(4-8)	SB02-COMP(8-12)
			Sample Date	6/18/2013	6/18/2013	6/18/2013	6/18/2013	6/18/2013	6/18/2013	6/18/2013	6/18/2013	6/18/2013	6/18/2013	6/18/2013
			Sample Interval (0-4)	0-4	0-4	0-4	0-4	0-4	4-8	4-8	4-8	4-8	4-8	8-12
Analyte	**Analytical Method**	**TCLP Threshold Limit**	**Unit**											
TCLP Chlordane	8081B	0.03	mg/L	**0.097**	0.026	**0.051**	**0.065**	0.027	**0.093**	0.021	**0.034**	**0.09**	0.021	0.019
Total Chlordane	8081B	---	µg/kg	NA	76000	54000	130000	46000	NA	8600	16000	110000	13000	NA
TCLP Heptachlor Epoxide	8081B	0.008	mg/L	0.0012	0.0004	0.0009	0.0002	0.0004	0.0012	0.0004	0.0004	0.0007	0.0002	ND

SB-03			Location	SB03-COMP(0-4)	SB03-3A(0-4)	SB03-4A(0-4)	SB03-3B(0-4)	SB03-4B(0-4)	SB03-COMP(4-8)	SB03-3A(4-8)	SB03-4A(4-8)	SB03-3B(4-8)	SB03-4B(4-8)
			Sample Date	6/18/2013	6/18/2013	6/18/2013	6/18/2013	6/18/2013	6/18/2013	6/18/2013	6/18/2013	6/18/2013	6/18/2013
			Sample Interval (0-4)	0-4	0-4	0-4	0-4	0-4	4-8	4-8	4-8	4-8	4-8
Analyte	**Analytical Method**	**Screening Value**	**Unit**										
TCLP Chlordane	8081B	0.03	mg/L	**0.15**	**0.034**	**0.063**	**0.19**	**0.13**	**0.089**	**0.043**	**0.054**	**0.13**	**0.06**
Total Chlordane	8081B	---	µg/kg	NA	65000	49000	100000	28000	NA	5000	8000	21000	8600
TCLP Heptachlor Epoxide	8081B	0.008	mg/L	0.0018	0.001	0.0011	0.0005	0.0009	0.0006	0.0007	0.0006	0.0004	0.0008

SB-03 (continued)			Location	SB03-COMP(8-12)	SB03-3A(8-12)	SB03-4A(8-12)	SB03-3B(8-12)	SB03-4B(8-12)	SB03-COMP(12-14)	SB03-3A(12-14)	SB03-4A(12-14)	SB03-3B(12-14)	SB03-4B(12-14)
			Sample Date	6/18/2013	6/18/2013	6/18/2013	6/18/2013	6/18/2013	6/18/2013	6/18/2013	6/18/2013	6/18/2013	6/18/2013
			Sample Interval (0-4)	8-12	8-12	8-12	8-12	8-12	12-14	12-14	12-14	12-14	12-14
Analyte	**Analytical Method**	**Screening Value**	**Unit**										
TCLP Chlordane	8081B	0.03	mg/L	**0.062**	0.01	**0.047**	**0.038**	**0.048**	**0.048**	0.023	0.0074	0.026	**0.033**
Total Chlordane	8081B	---	µg/kg	NA	82000	870	360000	410000	NA	50000	230	130000	380000
TCLP Heptachlor Epoxide	8081B	0.008	mg/L	0.0002	0.0002	0.0025	0.0007	0.0022	0.0002	0.0003	ND	0.0005	0.0003

SB-05			Location	SB05-COMP(0-4)	SB05-1C(0-4)	SB05-2C(0-4)	SB05-1D(0-4)	SB05-2D(0-4)	SB05-COMP(8-12)	SB05-1C(8-12)	SB05-2C(8-12)	SB05-1D(8-12)	SB05-2D(8-12)
			Sample Date	6/17/2013	6/17/2013	6/17/2013	6/17/2013	6/17/2013	6/17/2013	6/17/2013	6/17/2013	6/17/2013	6/17/2013
			Sample Interval (0-4)	0-4	0-4	0-4	0-4	0-4	8-12	8-12	8-12	8-12	8-12
Analyte	**Analytical Method**	**Screening Value**	**Unit**										
TCLP Chlordane	8081B	0.03	mg/L	**0.051**	**0.11**	0.029	**0.073**	0.029	**0.037**	0.016	0.026	0.023	**0.078**
Total Chlordane	8081B	---	µg/kg	NA	83000	7800	42000	22000	NA	7500	20000	22000	27000
TCLP Heptachlor Epoxide	8081B	0.008	mg/L	0.0004	0.0003	0.0005	0.0005	0.0002	0.002	ND	ND	0.0001	ND

SB-06			Location	SB06-COMP(0-4)	SB06-3C(0-4)	SB06-4C(0-4)	SB06-3D(0-4)	SB06-4D(0-4)	SB06-COMP(8-12)	SB06-3C(8-12)	SB06-4C(8-12)	SB06-3D(8-12)	SB06-4D(8-12)
			Sample Date	6/17/2013	6/17/2013	6/17/2013	6/17/2013	6/17/2013	6/17/2013	6/17/2013	6/17/2013	6/17/2013	6/17/2013
			Sample Interval (0-4)	0-4	0-4	0-4	0-4	0-4	8-12	8-12	8-12	8-12	8-12
Analyte	**Analytical Method**	**Screening Value**	**Unit**										
TCLP Chlordane	8081B	0.03	mg/L	**0.36**	**0.2**	**0.28**	**0.24**	**0.041**	**0.05**	0.025	**0.03**	**0.048**	0.027
Total Chlordane	8081B	---	µg/kg	NA	160000	110000	100000	29000	NA	63000	66000	1600	33000
TCLP Heptachlor Epoxide	8081B	0.008	mg/L	0.0029	0.0014	0.0016	0.002	0.0005	0.0001	0.0002	0.0006	0.0002	0.0002

SB-08			Location	SB08-COMP(0-4)	SB08-1E(0-4)	SB08-2E(0-4)	SB08-1F(0-4)	SB08-2F(0-4)
			Sample Date	6/17/2013	6/17/2013	6/17/2013	6/17/2013	6/17/2013
			Sample Interval (0-4)	0-4	0-4	0-4	0-4	0-4
Analyte	**Analytical Method**	**Screening Value**	**Unit**					
TCLP Chlordane	8081B	0.03	mg/L	**0.085**	**0.077**	**0.065**	**0.039**	**0.16**
Total Chlordane	8081B	---	µg/kg	NA	130000	50000	25000	33000
TCLP Heptachlor Epoxide	8081B	0.008	mg/L	0.006	0.0008	0.0011	0.0009	0.0029

SB-09			Location	SB09-COMP(0-4)
			Sample Date	6/17/2013
			Sample Interval (0-4)	0-4
Analyte	**Analytical Method**	**Screening Value**	**Unit**	
TCLP Chlordane	8081B	0.03	mg/L	0.016
Total Chlordane	8081B	---	µg/kg	NA
TCLP Heptachlor Epoxide	8081B	0.008	mg/L	0.0003

SB-24			Location	SB24-COMP(0-4)
			Sample Date	6/17/2013
			Sample Interval (0-4)	0-4
Analyte	**Analytical Method**	**TCLP Threshold Limit**	**Unit**	
TCLP Chlordane	8081B	0.03	mg/L	0.029
Total Chlordane	8081B	---	µg/kg	NA
TCLP Heptachlor Epoxide	8081B	0.008	mg/L	0.0007

Notes:
Preliminary data, subject to validation.
Values exceeding the toxicity characteristic leaching procedure (TCLP) Threshold Limit are red and bolded.
Qualifiers were omitted from this data table.
NA - Not Analyzed
ND - Non Detect
mg/L - milligram per liter
µg/kg - milligram per kilogram

Table 5
Long Term Monitoring Program Summary
FGGM 13 Former Pesticide Shop, Building 6621
Fort George G. Meade, Maryland

Category	Analytical Parameters	Sampling Frequency	Monitoring Wells	Sampling Method
Compliance Groundwater Monitoring				
Compliance Monitoring Constituents	Target Compount List Volatile Organic Compounds Pesticides Target Analyte List Metals	Year 1: Quarterly Years 2 – 3: semi-annually[2] Year 4 - cessation of long term monitoring: Annually[2,4]	MW-1R MW-2R MW-3R MW-4R MW-5 MW-6 MW-7 MW-8 MW-9[3]	Low Flow Sampling
Performance Monitoring				
Biogeochemical parameters, dissolved gasses	pH temperature specific conductance	Concurrent with compliance groundwater monitoring schedule.	MW-2R	Low Flow Sampling
	methane ethene ethane			
	TOC			
	nitrate dissolved iron sulfate volatile fatty acids	As Needed Basis		

Notes:
1. The groundwater monitoring program may be modified over time based on performance monitoring results, upon United States Environmental Protection Agency concurrence.

2. Monitoring will be conducted at select monitoring wells to be determined following an evaluation of Year 1 results.

3. MW-9 will be installed prior to conducting chemical injections.

4. The cessation of long term monitoring will be evaluated during the CERCLA five year review process.

CVOCs - chlorinated volatile organic compounds

DOC - dissolved organic carbon

TOC - total organic carbon

Figures

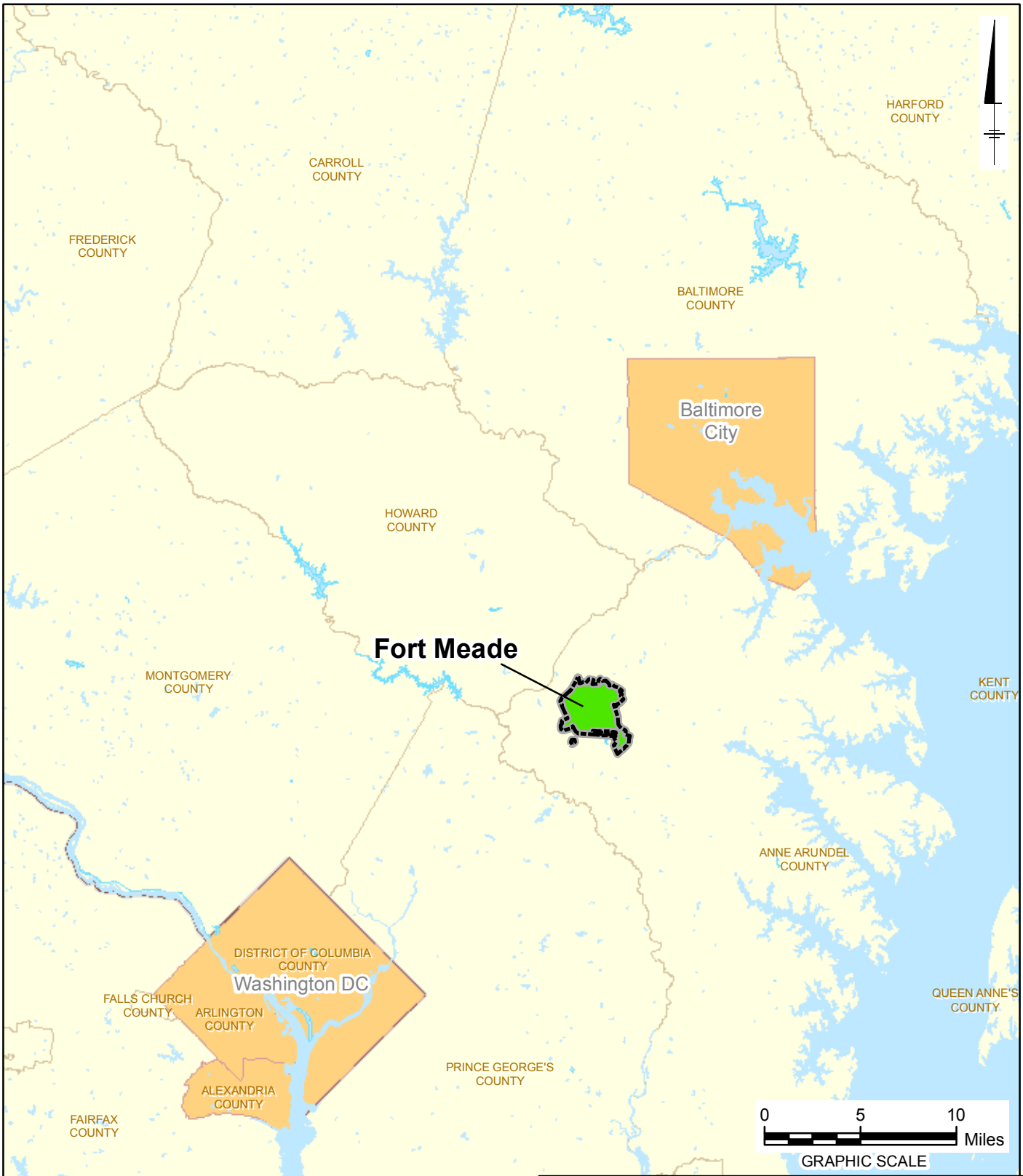

FGGM13 FORMER PESTICIDE SHOP, BUILDING 6621
FORT GEORGE G. MEADE, MARYLAND

SITE LOCATION MAP

ARCADIS

FIGURE
1

CITY: MPLS DIV/GROUP: IM DB: MG
FORT GEORGE G. MEADE
G:\GIS\Projects\Fort_Meade\ArcMap\Pesticide_Shop\2013\Site_Location_20130306.mxd - 3/6/2013 @ 11:51:25 AM

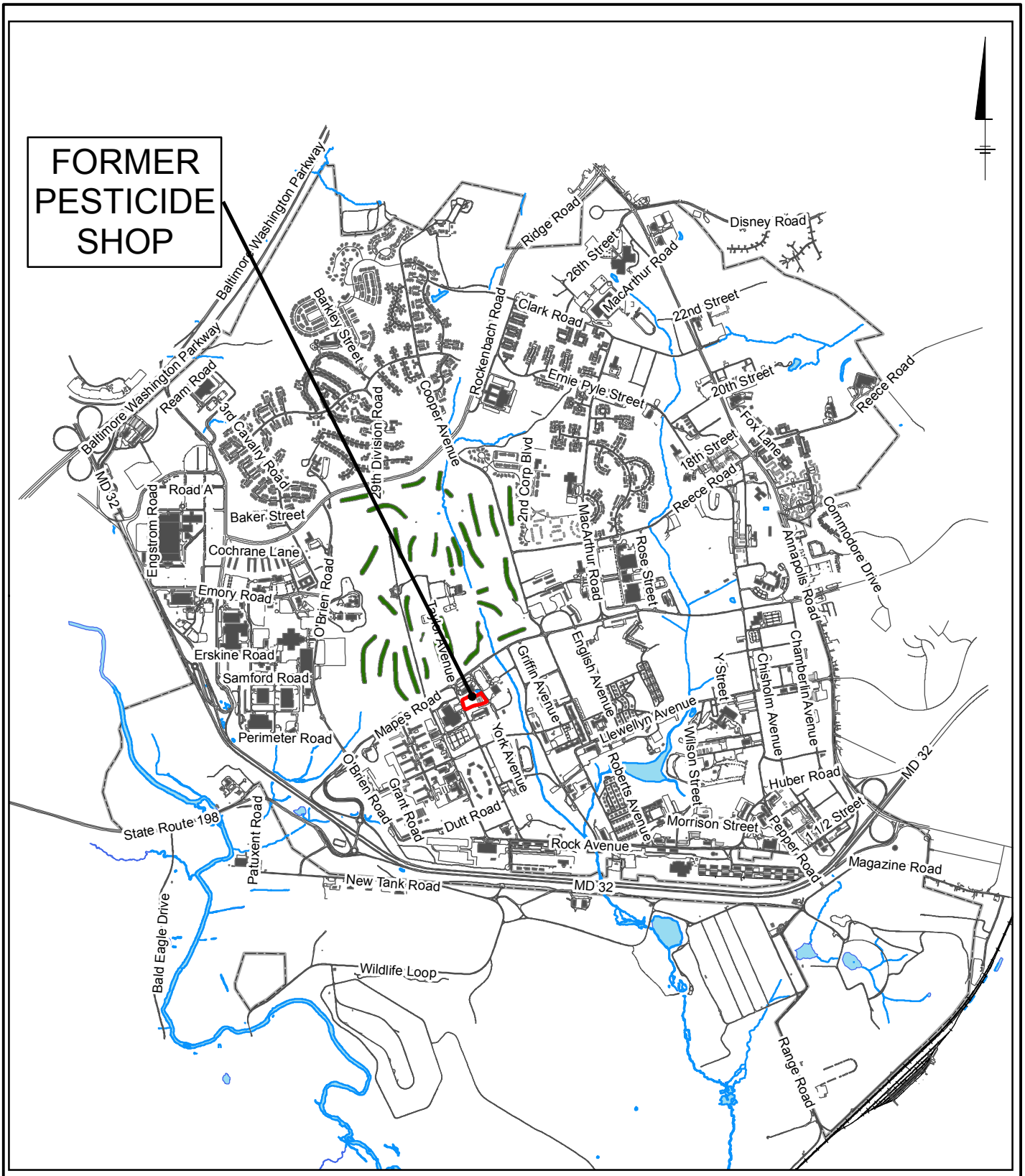

LEGEND:

SITE BOUNDARY

0 1,500 3,000 Feet

GRAPHIC SCALE

FGGM13 FORMER PESTICIDE SHOP, BUILDING 6621
FORT GEORGE G. MEADE, MARYLAND

FGGM13 FORMER PESTICIDE SHOP, BUILDING 6621 SITE LOCATION MAP

ARCADIS

FIGURE 2

CITY: MPLS DIV/GROUP: IM DB: MG LD: A. DUGGINS
FORT MEADE
G:\GIS\Projects\Fort_Meade\ArcMap\Pesticide_Shop\2013\Pesticide_Shop_Loc_20130306.mxd - 3/6/2013 @ 1:58:24 PM

LEGEND:

- SITE BOUNDARY
- FORMER PESTICIDE SHOP AREAS
- FORMER BUILDING 6621

NOTES:

11/2011 IMAGERY ACCESSED THROUGH BING MAPS AERIAL VIA ARCGIS ONLINE LAYER PACKAGES BY ESRI (12/1/2010) (C) 2010 MICROSOFT CORPORATION AND ITS DATA SUPPLIERS ACCESSED ON 3/6/2013 THROUGH ARCGIS 10.

FGGM13 FORMER PESTICIDE SHOP, BUILDING 6621
FORT GEORGE G. MEADE, MARYLAND

FGGM13 FORMER PESTICIDE SHOP, BUILDING 6621 SITE MAP

ARCADIS

FIGURE
3

CITY: MPLS DIV/GROUP: IM DB: MG LD: AD
FORT MEADE
Path: G:\GIS\Projects\Fort_Meade\ArcMap\Pesticide_Shop\2013\6621_Location_Map_20130308.mxd

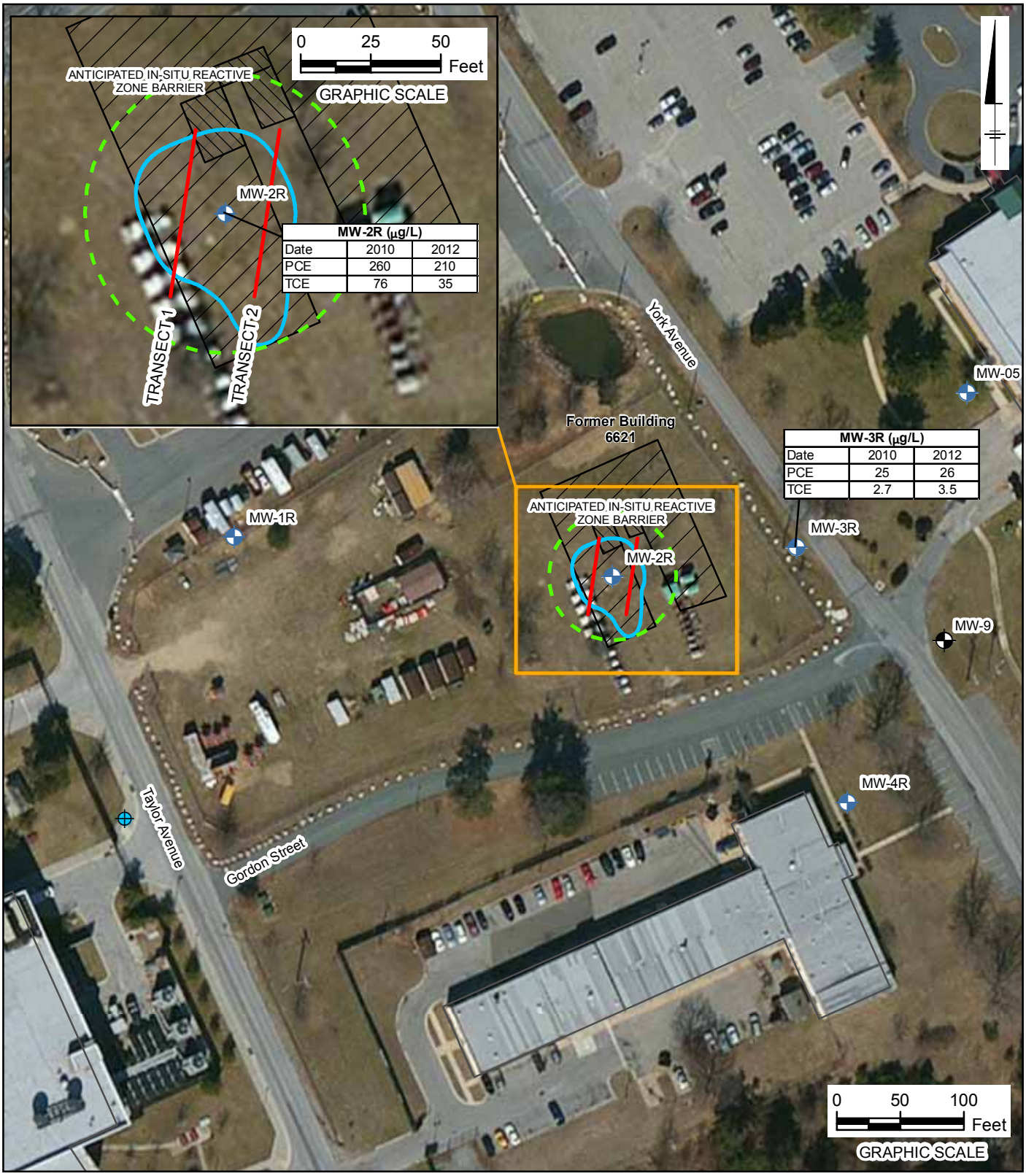

MW-2R (µg/L)		
Date	2010	2012
PCE	260	210
TCE	76	35

MW-3R (µg/L)		
Date	2010	2012
PCE	25	26
TCE	2.7	3.5

LEGEND:

- PROPOSED MONITORING WELL
- WELL
- INJECTION TRANSECTS
- APPROXIMATE EXTENT OF EXCAVATION
- WATER SOURCE
- FORMER PESTICIDE SHOP BUILDINGS
- FORMER BUILDING 6621
- ANTICIPATED IN-SITU REACTIVE ZONE BARRIER

NOTES:
1. FT BGS - FEET BELOW GROUND SURFACE
2. ERD - ENHANCED REDUCTIVE DECHLORINATION
3. TCE - TRICHLOROETHENE
4. PCE - TETRACHLOROETHENE
5. µG/L - MICROGRAMS PER LITER
6. 11/2011 IMAGERY ACCESSED THROUGH BING MAPS AERIAL VIA ARCGIS ONLINE LAYER PACKAGES BY ESRI (12/1/2010) (C) 2010 MICROSOFT CORPORATION AND ITS DATA SUPPLIERS. ACCESSED ON 9/23/2013 THROUGH ARCGIS 10.

FGGM-13 FORMER PESTICIDE SHOP, BUILDING 6621
FORT GEORGE G. MEADE, MARYLAND

ENHANCED REDUCTIVE DECHLORINATION LAYOUT

ARCADIS

FIGURE
4

SIGNS (4 TOTAL) SHALL APPEAR AS SHOWN BELOW:

NOTICE

ENVIRONMENTALLY RESTRICTED AREA

DIGGING RESTRICTED WITHOUT PERMIT

CONTACT FGGM ENVIRONMENTAL DIVISION:
301-677-9365

LEGEND:

SIGN LOCATIONS

EXTENT OF LAND USE CONTROLS

NOTES:

11/2011 IMAGERY ACCESSED THROUGH BING MAPS AERIAL VIA ARCGIS ONLINE LAYER PACKAGES BY ESRI (12/1/2010) (C) 2010 MICROSOFT CORPORATION AND ITS DATA SUPPLIERS. ACCESSED ON 3/6/2013 THROUGH ARCGIS 10.

FGGM13 FORMER PESTICIDE SHOP, BUILDING 6621
FORT GEORGE G. MEADE, MARYLAND

EXTENT OF LAND USE CONTROLS

ARCADIS

FIGURE
5

LEGEND:

- PROPOSED MONITORING WELL
- WELL
- STREAM GAUGE
- ROAD
- RAILROAD
- DEMOLISHED STRUCTURES
- EXISTING STRUCTURES
- SURFACE WATER
- INSTALLATION BOUNDARY

0 100 200 Feet

GRAPHIC SCALE

NOTES:

11/2011 IMAGERY ACCESSED THROUGH BING MAPS AERIAL VIA ARCGIS ONLINE LAYER PACKAGES BY ESRI (12/1/2010) (C) 2010 MICROSOFT CORPORATION AND ITS DATA SUPPLIERS. ACCESSED ON 3/6/2013 THROUGH ARCGIS 10.

FGGM13 FORMER PESTICIDE SHOP, BUILDING 6621
FORT GEORGE G. MEADE, MARYLAND

PROPOSED MONITORING WELL (MW-9) INSTALLATION LOCATION

ARCADIS

FIGURE
6

Figure 7
Schedule

ID	Task Name	Duration	Start	Finish
0	**Pesticide Shop Remedial Design**	**553 days**	**Mon 10/29/12**	**Tue 12/30/14**
1	**FGGM-13 - Pesticide Shop Building 6621**	**553 days**	**Mon 10/29/12**	**Tue 12/30/14**
2	**Remedial Design**	**205.5 days**	**Mon 10/29/12**	**Mon 8/19/13**
3	Internal Draft RD	65 days	Mon 10/29/12	Mon 5/13/13
4	Army Review	15 days	Tue 5/14/13	Tue 6/4/13
5	Draft RD	5 days	Wed 6/5/13	Tue 6/11/13
6	MDE Review	22 days	Wed 6/12/13	Fri 7/12/13
7	EPA Review	22 days	Wed 6/12/13	Fri 7/12/13
8	Draft Final RD	5.5 days	Mon 7/15/13	Mon 7/22/13
9	MDE Review	10 days	Mon 7/22/13	Mon 8/5/13
10	EPA Review	10 days	Mon 7/22/13	Mon 8/5/13
11	Final	10 days	Mon 8/5/13	Mon 8/19/13
12	**Remedial Action**	**33.62 days**	**Fri 7/12/13**	**Thu 8/29/13**
13	Mobilization (Procurement/Planning/permits)	7.62 days	Fri 7/12/13	Wed 7/24/13
14	CM/Implement RA (soil)	20 days	Wed 7/24/13	Wed 8/21/13
15	CM/Implement RA (GW)	20 days	Wed 7/31/13	Wed 8/28/13
16	Demobilization	1 day	Wed 8/28/13	Thu 8/29/13
17	**Remedial Action Report**	**35 days**	**Wed 8/14/13**	**Thu 10/3/13**
18	Internal Draft RAR	10 days	Wed 8/14/13	Wed 8/28/13
19	Army Review	10 days	Wed 8/28/13	Thu 9/12/13
20	Draft Final RAR	5 days	Thu 9/12/13	Thu 9/19/13
21	MDE Review	10 days	Thu 9/19/13	Thu 10/3/13
22	EPA Review	10 days	Thu 9/19/13	Thu 10/3/13
23	Final RAR	0 days	Thu 10/3/13	Thu 10/3/13
24	**LTO/LTM**	**339.38 days**	**Thu 8/29/13**	**Tue 12/30/14**
25	**Year 1 (2013)**	**256.5 days**	**Thu 8/29/13**	**Wed 9/3/14**
26	LTO/LTM	256 days	Thu 8/29/13	Tue 9/2/14
27	**Annual Report**	**72.5 days**	**Tue 5/20/14**	**Wed 9/3/14**
28	Draft	20.5 days	Tue 5/20/14	Thu 6/19/14
29	Army Review	15 days	Thu 6/19/14	Fri 7/11/14
30	Draft Final	5 days	Fri 7/11/14	Fri 7/18/14
31	MDE Review	22 days	Fri 7/18/14	Tue 8/19/14
32	EPA Review	22 days	Fri 7/18/14	Tue 8/19/14
33	Final	10 days	Tue 8/19/14	Wed 9/3/14
34	Approved	0 days	Wed 9/3/14	Wed 9/3/14
35	**Year 2 (2014)**	**80.88 days**	**Fri 9/5/14**	**Tue 12/30/14**
36	LTO/LTM	81.63 days	Fri 9/5/14	Tue 12/30/14
37	**Annual Report**	**72 days**	**Thu 9/18/14**	**Tue 12/30/14**
38	Draft	20 days	Thu 9/18/14	Wed 10/15/14
39	Army Review	15 days	Thu 10/16/14	Wed 11/5/14
40	Draft Final	5 days	Thu 11/6/14	Wed 11/12/14
41	MDE Review	22 days	Thu 11/13/14	Mon 12/15/14
42	EPA Review	22 days	Thu 11/13/14	Mon 12/15/14
43	Final	10 days	Tue 12/16/14	Tue 12/30/14
44	Approved	0 days	Tue 12/30/14	Tue 12/30/14

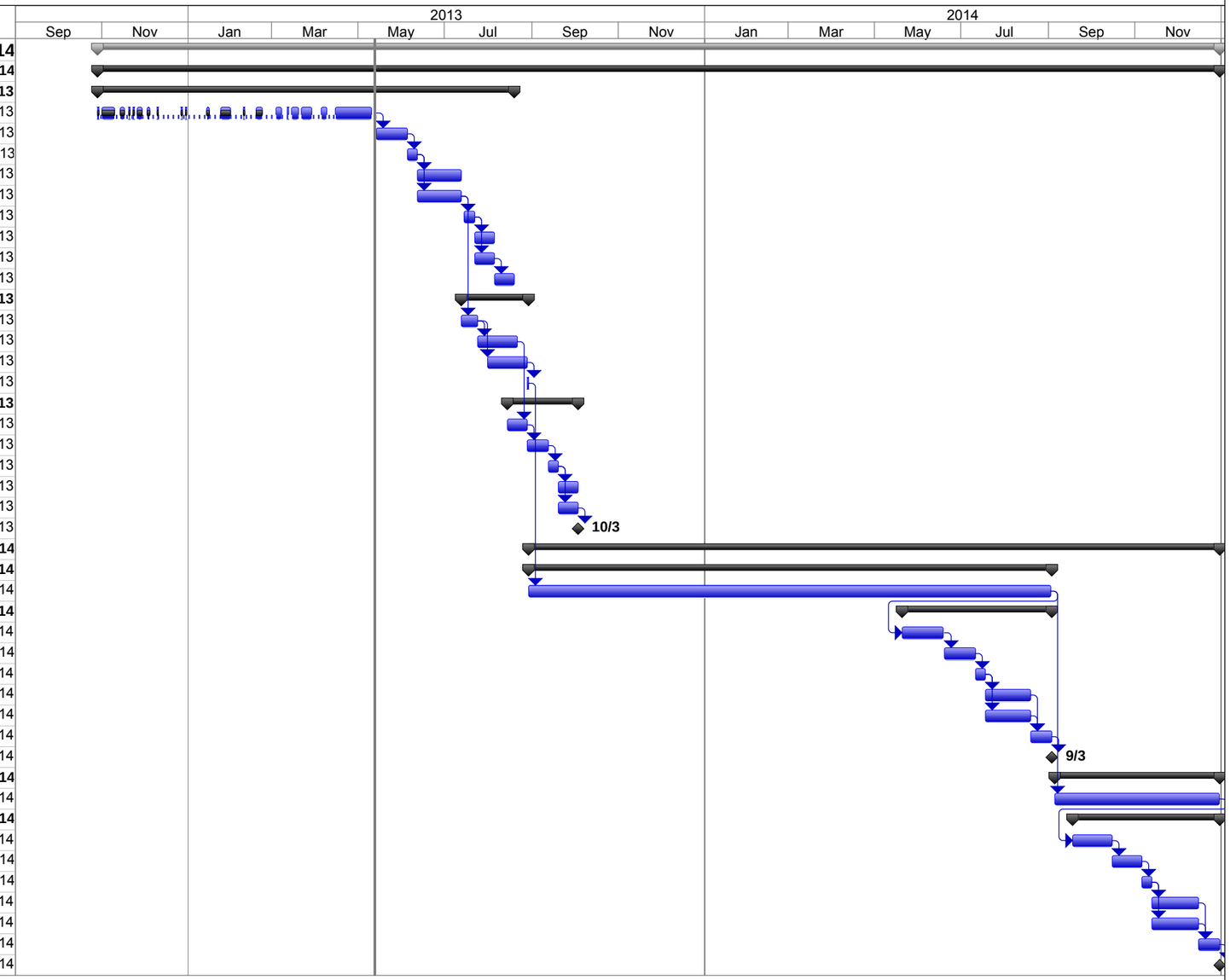

Project: Pesticide Shop Remedial Des
Date: Mon 5/13/13

Task		Project Summary		Inactive Milestone		Manual Summary Rollup		Progress	
Split		External Tasks		Inactive Summary		Manual Summary		Deadline	
Milestone		External Milestone		Manual Task		Start-only			
Summary		Inactive Task		Duration-only		Finish-only			

Appendix A

Drawings

CITY: NEWTOWN, PA/CRANBURY-NJ DIV/GROUP: ENVCAD DB: A. SAMIOS/JMEYER/TFATTO LD: M. WASILEWSKI PIC: T. TALELE PM: T. LLEWELLYN TM: W.KAHL LYR:ON=*;OFF=*REF*
C:\ENVCAD\CRANBURY\RETURN-TO\Newtown-PA\GP09\MEAD\PEST\HG001\CONTRACT\GP09MEAD_02.dwg LAYOUT: COVER SAVED: 8/1/2013 8:05 AM ACADVER: 18.1S (LMS TECH) PAGESETUP: ---- PLOTSTYLETABLE: ARCADIS.CTB PLOTTED: 8/1/2013 8:06 AM BY: FATTO, TRACEY

REMEDIAL DESIGN AND PERMIT DRAWINGS

FGGM13 FORMER PESTICIDE SHOP
FORT MEADE, MARYLAND

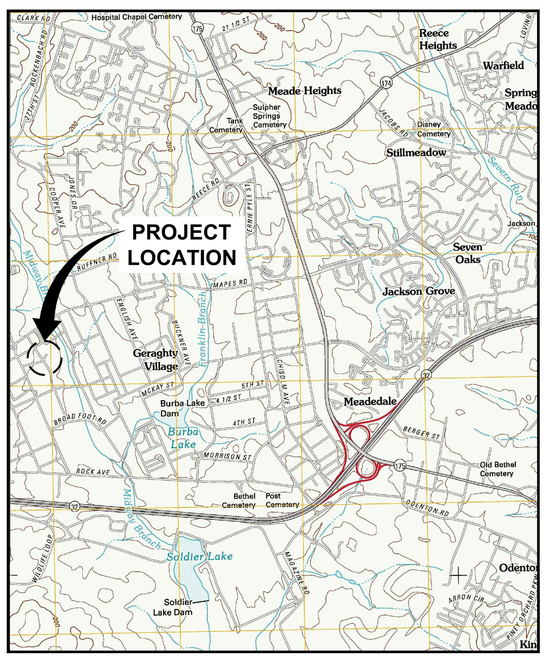

REFERENCE: BASE MAP USGS 7.5 MINUTE QUADRANGLE., ODENTON, MD, 2011.

LOCATION MAP

0 2000' 4000'
GRAPHIC SCALE

MARYLAND

DATE ISSUED / DATE REVISED
AUGUST 2013

US ARMY ENVIRONMENTAL COMMAND
FORT MEADE, MARYLAND

ARCADIS

ARCADIS U.S., INC.

INDEX TO DRAWINGS

	GENERAL
	COVER SHEET
1	GENERAL NOTES, LEGEND, AND ABBREVIATIONS
2	EXISTING CONDITIONS
3	PRE-EXCAVATION SOIL SAMPLING RESULTS - TOTAL CHLORDANE/TCLP
4	SITE PREPARATION PLAN
5	EXCAVATION PLAN
	EROSION SEDIMENT CONTROL PERMIT
ES-1	EROSION AND SEDIMENT CONTROL NOTES AND LEGEND
ES-2	EROSION AND SEDIMENT CONTROL NOTES AND TABLES
ES-3	EROSION AND SEDIMENT CONTROL PLAN
ES-4	EROSION AND SEDIMENT CONTROL DETAILS
ES-5	FINAL GRADING AND RESOTRATION

GENERAL NOTES:

1. SCALES ARE AS INDICATED ON EACH DRAWING.
2. THE GENERAL NOTES AND LEGEND PROVIDED ON THIS SHEET APPLY TO ALL DRAWINGS UNLESS OTHERWISE INDICATED.
3. THE UTILITIES SHOWN HAVE BEEN LOCATED FROM EVIDENCE OBSERVED ON THE SURFACE ONLY. THERE ARE NO GUARANTEES THAT THE UTILITIES SHOWN COMPRISE ALL SUCH UTILITIES IN THE AREA, EITHER IN-SERVICE OR ABANDONED. FURTHERMORE, DOES NOT WARRANT THAT THE UNDERGROUND UTILITIES SHOWN ARE IN THE EXACT LOCATION INDICATED. THE UNDERGROUND UTILITIES HAVE NOT BEEN PHYSICALLY LOCATED. THE CONTRACTOR SHALL COMPLETE UTILITY CLEARANCE OF ALL AREAS WITHIN THE LIMIT OF DISTURBANCE IN ACCORDANCE WITH THE REQUIREMENTS OF THE SITE HEALTH AND SAFETY PLAN.
4. PREMISES ARE COMMONLY KNOWN AS FORMER PESTICIDE SHOP, FORT MEADE, MARYLAND.
5. HORIZONTAL DATUM IS MARYLAND SPCS NAD 83.
6. VERTICAL DATUM IS NAVD 88.
7. CONTOUR INTERVAL IS 2 FOOT. UNLESS OTHERWISE INDICATED.
8. CONTRACTOR SHALL COMPLY WITH FORT GEORGE G. MEADE DIG PERMIT PROCESS AND NOTIFY MARYLAND ONE-CALL AT LEAST THREE DAYS PRIOR TO COMMENCEMENT OF WORK TO VERIFY UTILITY LOCATIONS AND PERFORM A MARKOUT SURVEY. CONTRACTOR SHALL RE-NOTIFY MARYLAND ONE-CALL AND RE-ESTABLISH ACTIVE UTILITY TICKET AS REQUIRED.
9. CONTRACTOR SHALL BE RESPONSIBLE FOR IDENTIFYING AND VERIFYING THE LOCATION OF ALL SITE UTILITIES INDEPENDENTLY WITHIN THE LIMITS OF DISTURBANCE OR REMEDIAL ACTIVITIES PERFORMED UNDER THE SCOPE OF WORK
10. THE CONTRACTOR SHALL PREPARE, MAINTAIN, AND IMPLEMENT THE SITE HEALTH AND SAFETY PLAN IN CONFORMANCE WITH ALL APPLICABLE FEDERAL STATE AND LOCAL LAWS, RULES AND REGULATIONS. THE CONTRACTOR SHALL ENSURE THAT THEIR EMPLOYEES AND SUBCONTRACTORS ARE OCCUPATIONAL SAFETY AND HEALTH ADMINISTRATION TRAINED ACCORDING TO CFR 1910 120 AND HAVE THE CAPABILITIES OF IMPLEMENTING THE HEALTH AND SAFETY PLAN. THE CONTRACTOR SHALL BE RESPONSIBLE FOR ENSUING THE HEALTH AND SAFETY OF THE CONTRACTOR'S EMPLOYEES AND SUBCONTRACTORS.

GENERAL LEGEND

- 60 — INDEX LAND SURFACE ELEVATION CONTOUR LINE
- 59 — INTERVAL LAND SURFACE ELEVATION CONTOUR LINE
- *57.9 — LAND SURFACE SPOT ELEVATION
- EDGE OF PAVEMENT
- PAVED DRIVE
- DIRT ACCESS DRIVE
- 4" — CONCRETE / SIDEWALK
- BUILDING
- TREE LINE
- TREE
- X — CHAIN LINK FENCE
- CHAIN LINK GATE
- O/HW — OVERHEAD ELECTRIC
- E — UNDERGROUND ELECTRIC
- W — UNDERGROUND WATER
- T — UNDERGROUND TELEPHONE
- G — UNDERGROUND GAS
- WE 178.3 — RIVER / STREAM/ EDGE OF SURFACE WATER (WITH WATER ELEVATION)
- UTILITY POLE
- LIGHT POLE
- FR — FIRE HYDRANT
- CB — CATCH BASIN
- MH — MANHOLE
- T — ELECTRIC TRANSFORMER
- BOLLARD
- WM — WATER METER
- DRAINAGE DITCH AND SURFACE WATER FLOW
- MONITORING WELL
- PRE-EXCAVATION SOIL SAMPLE LOCATION
- SAMPLE LOCATION
- SAMPLE GRID
- SD — STORM DRAIN LOCATION
- OUTFALL LOCATION
- S — STORMWATER PIPING SYSTEM
- EXTENT OF EXCAVATION
- STAGING/SUPPORT AREA

ABBREVIATIONS:

DIA	DIAMETER
EX	EXISTING
TYP	TYPICAL
INV	INVERT
MIN	MINIMUM
PVC	POLYVINYL CHLORIDE
DWG	DRAWING
ELEV	ELEVATION
SQ FT	SQUARE FEET
N.S.	NOT TO SCALE
FT	FEET
BLDG.	BUILDING
BLDG.A.	LINEAR FEET
MW	MONITORING WELL
C.Y.	CUBIC YARD
MH	MANHOLE

EROSION AND SEDIMENT CONTROL LEGEND

- STOCKPILE AREA
- GRAVEL ROAD
- SCE — STABILIZED CONSTRUCTION ENTRANCE
- EQUIPMENT STAGING AREA
- INGRESS EGRESS ROUTE
- 1 — DETAIL/SECTION DESIGNATION
- 5 — NUMBER OF SHEET WHERE DETAIL/SECTION IS SHOWN
- 7 — NUMBER OF SHEET WHERE DETAIL/SECTION IS CUT

CITY: NEWTOWN, PA / CRANBURY-NJ DIV/GROUP: ENVCAD LD: M. WASILEWSKI/JMEYER PIC: T.TALELE PM: T.LLEWLLYN TM: W.KAHL LYR:ON=*;OFF=*REF*
C:\ENVCAD\CRANBURY\RETURN-TO\Newtown-PA\GP09MEAD\PEST\HG001\CONTRACT\GP09MEADG02.dwg LAYOUT: 1 SAVED: 8/1/2013 8:58 AM ACADVER: 18.1S (LMS TECH) PAGESETUP: ---- PLOTSTYLETABLE: ---- PLOTTED: 8/1/2013 10:07 AM BY: FATTO, TRACEY
XREFS: 09MEADX00 GP09MEADX01 IMAGES: PROJECTNAME: ---

THIS BAR REPRESENTS ONE INCH ON THE ORIGINAL DRAWING: USE TO VERIFY FIGURE REPRODUCTION SCALE

No.	Date	Revisions	By	Ckd
1	7/2013	UPDATE SITE FEATURES AND NOTES	JAM	AD

THIS DRAWING IS THE PROPERTY OF THE ARCADIS ENTITY IDENTIFIED IN THE TITLE BLOCK AND MAY NOT BE REUSED OR ALTERED IN WHOLE OR IN PART WITHOUT THE EXPRESS WRITTEN PERMISSION OF SAME.

Professional Engineer's Name: DAVID ANTHONY CABALLERO
Professional Engineer's No.: 22777

State	Date Signed	Project Mgr.
MD		TC
Designed by	Drawn by	Checked by
RK	MW/JM	DC

ARCADIS U.S., INC.

FGGM13 FORMER PESTICIDE SHOP, BUILDING 6621 • FORT MEADE, MARYLAND
REMEDIAL DESIGN EXCAVATION AND SITE GRADING

GENERAL NOTES, LEGEND, AND ABBREVIATIONS

ARCADIS Project No. GP09MEAD.PEST.HG001
Date AUGUST, 2013

ARCADIS
10 FRIENDS LANE
NEWTOWN, PA 18940
TEL. 267.685.1800

1

NOTE:

1. SEE DRAWING 1 FOR GENERAL NOTES, LEGEND, AND ABBREVIATIONS.

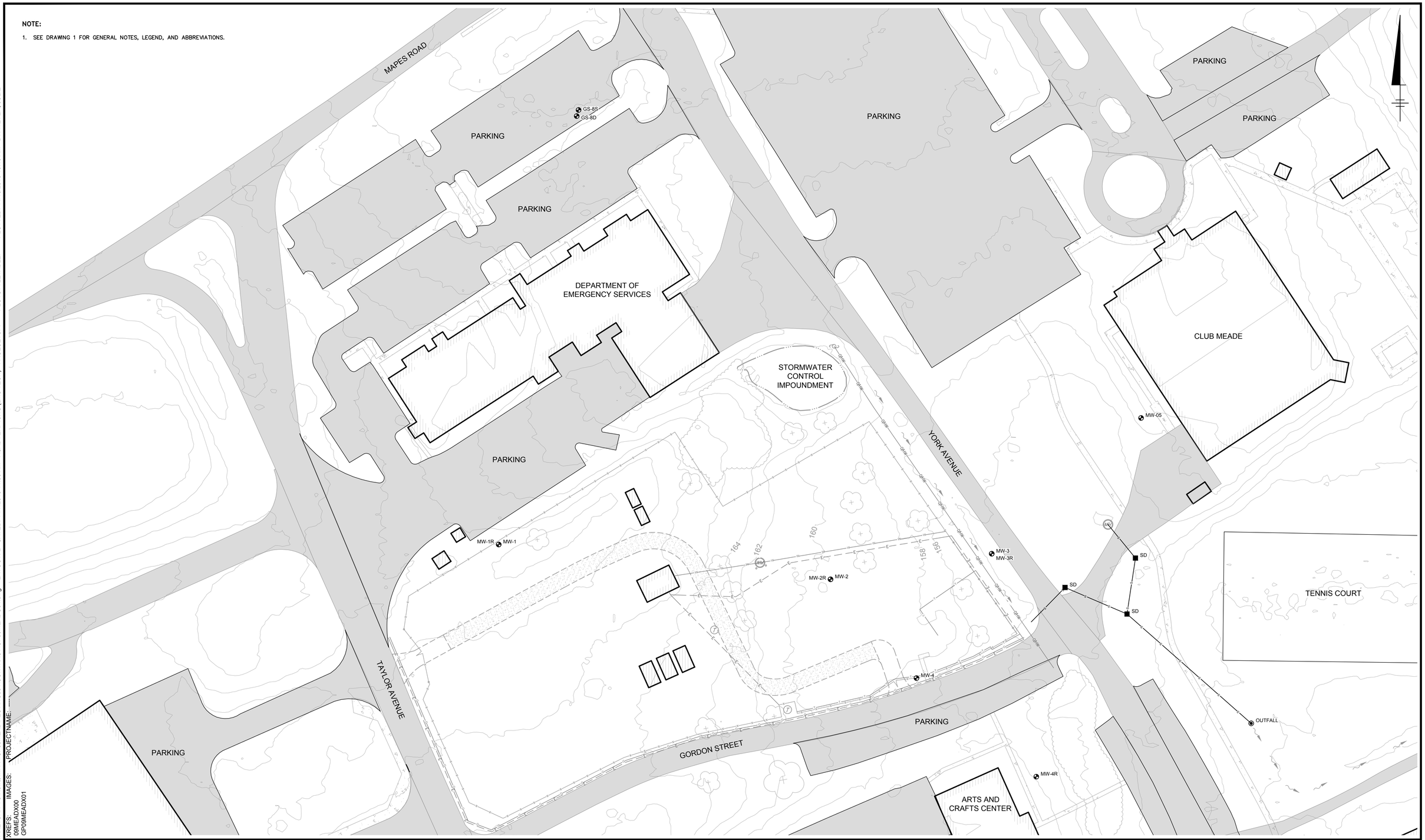

CITY: NEWTOWN, PA / CRANBURY-NJ DIV/GROUP: ENVCAD LD: M. WASILEWSKI/JMEYER PIC: T.TALELE PM: T.LLEWLLYN TM: W.KAHL LYR:ON=*;OFF=*REF*
G:\ENVCAD\CRANBURY\RETURN-TO\Newtown-PA\GP09MEAD\PEST\HG001\CONTRACT\GP09MEADG01.dwg LAYOUT: 2 SAVED: 11/7/2013 11:00 AM ACADVER: 18.1S (LMS TECH) PAGESETUP: ---- PLOTSTYLETABLE: ---- PLOTTED: 11/13/2013 10:46 AM BY: MEYER, JULIE

XREFS: PROJECTNAME: ----
IMAGES: 09MEADX00
GP09MEADX01

0 40' 80'
GRAPHIC SCALE

THIS BAR REPRESENTS ONE INCH ON THE ORIGINAL DRAWING: USE TO VERIFY FIGURE REPRODUCTION SCALE

No.	Date	Revisions	By	Ckd
1	7/2013	UPDATE SITE FEATURES AND NOTES	JAM	AD

THIS DRAWING IS THE PROPERTY OF THE ARCADIS ENTITY IDENTIFIED IN THE TITLE BLOCK AND MAY NOT BE REUSED OR ALTERED IN WHOLE OR IN PART WITHOUT THE EXPRESS WRITTEN PERMISSION OF SAME.

Professional Engineer's Name
DAVID ANTHONY CABALLERO
Professional Engineer's No.
22777

State	Date Signed	Project Mgr.
MD		TC
Designed by	Drawn by	Checked by
RK	MW/JM	DC

ARCADIS

ARCADIS U.S., INC.

FGGM13 FORMER PESTICIDE SHOP, BUILDING 6621 ● FORT MEADE, MARYLAND
REMEDIAL DESIGN EXCAVATION AND SITE GRADING

EXISTING CONDITIONS

ARCADIS Project No.
GP09MEAD.PEST.HG001

Date
AUGUST, 2013

ARCADIS
10 FRIENDS LANE
NEWTOWN, PA 18940
TEL. 267.685.1800

2

NOTES:

1. SEE DRAWING 1 FOR GENERAL NOTES, LEGEND, AND ABBREVIATIONS.
2. SOIL SAMPLE RESULTS ARE IN MICROGRAMS PER KILOGRAM (μg/kg).
3. PRE-EXCAVATION SOIL SAMPLES WERE COLLECTED ON NOVEMBER 27–29, 2013, JANUARY 29, 2013, AND JUNE 17–18, 2013 UTILIZING DIRECT PUSH SAMPLING METHODOLOGY. COMPLETE ANALYTICAL RESULTS ARE PROVIDED IN TABLE 1.
4. BOLDED VALUES INDICATE CONCENTRATION ABOVE THE SITE CLEANUP LEVEL (SCL).
5. SHADING PRESENTED HEREON IS BASED ON ROUND 3 WASTE CHARACTERIZATION RESULTS. COMPLETE ROUND 3 WASTE CHARACTERIZATION RESULTS ARE PROVIDED ON TABLE 4.

Analyte Site Cleanup Level (ug/kg)	
Chlordane	16,210

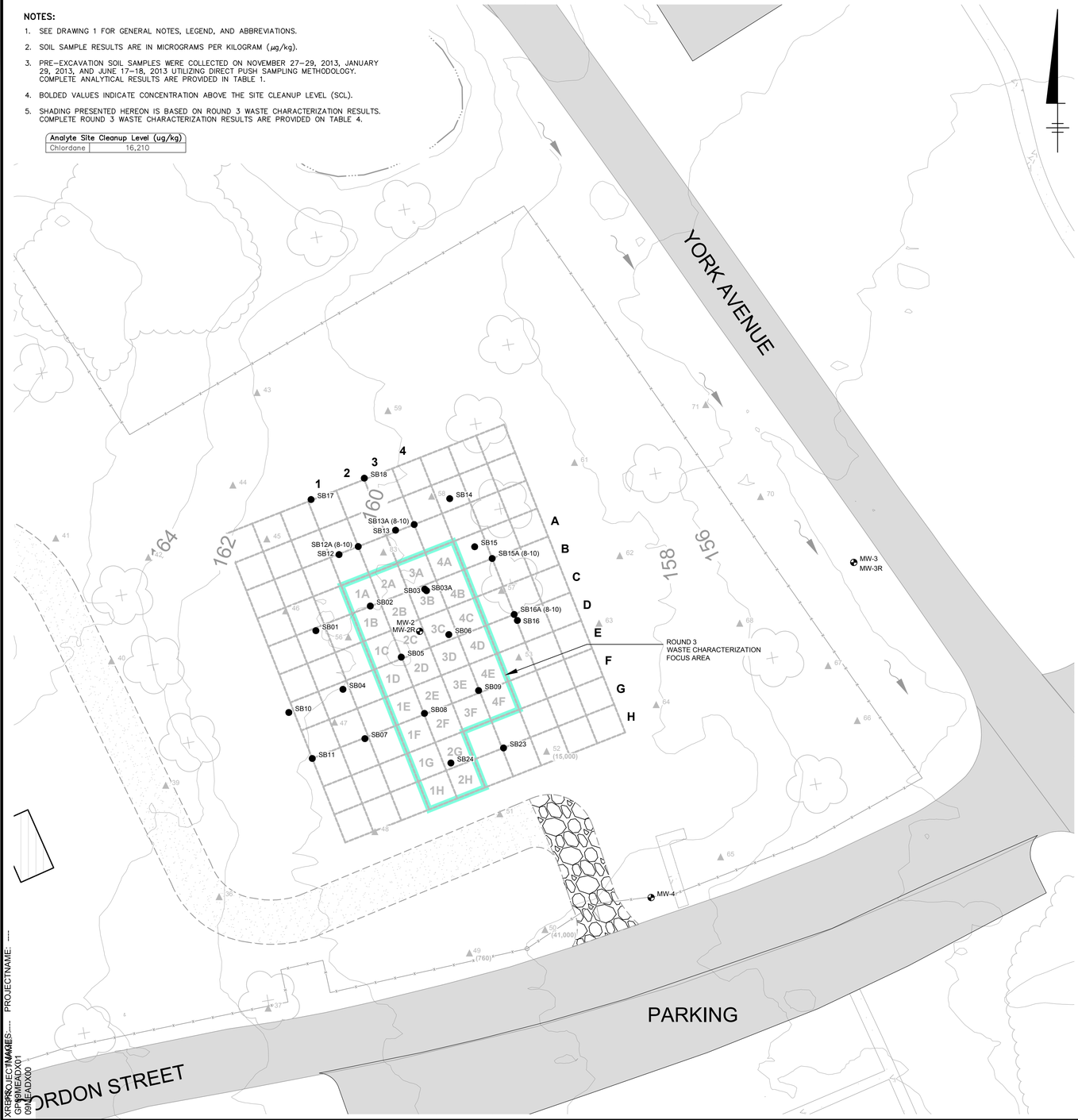

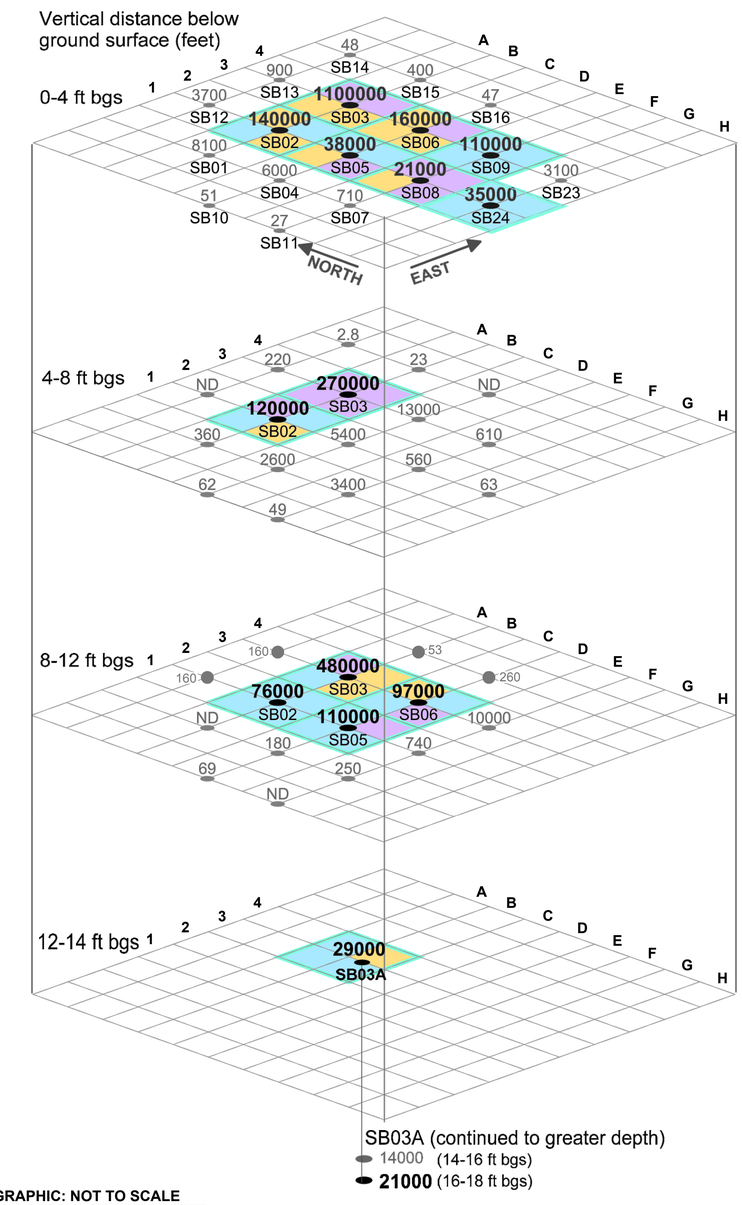

SOIL STACK GRAPHIC: NOT TO SCALE
ALL GRID CELLS ARE 10 FEET BY 10 FEET

LEGEND

- PRE-EXCAVATION SOIL SAMPLE LOCATION
- SAMPLE LOCATION
- MONITORING WELL
- SAMPLE GRID
- DIRT ACCESS ROAD
- STABILIZED CONSTRUCTION ENTRANCE
- NON-HAZARDOUS, TCLP CHLORDANE <0.03 mg/L
- HAZARDOUS, TOTAL CHLORDANE >50 ppm
- HAZARDOUS, TOTAL CHLORDANE <50 ppm

GRAPHIC SCALE: 0, 20', 40'

THIS BAR REPRESENTS ONE INCH ON THE ORIGINAL DRAWING: USE TO VERIFY FIGURE REPRODUCTION SCALE

No.	Date	Revisions	By	Ckd
1	7/2013	UPDATE SITE FEATURES AND NOTES	JAM	AD

THIS DRAWING IS THE PROPERTY OF THE ARCADIS ENTITY IDENTIFIED IN THE TITLE BLOCK AND MAY NOT BE REUSED OR ALTERED IN WHOLE OR IN PART WITHOUT THE EXPRESS WRITTEN PERMISSION OF SAME.

Professional Engineer's Name: DAVID ANTHONY CABALLERO
Professional Engineer's No.: 22777

State	Date Signed	Project Mgr.
MD		TC
Designed by	Drawn by	Checked by
RK	MW/JM	DC

ARCADIS
ARCADIS U.S., INC.

FGGM13 FORMER PESTICIDE SHOP, BUILDING 6621 • FORT MEADE, MARYLAND
REMEDIAL DESIGN EXCAVATION AND SITE GRADING

PRE-EXCAVATION SOIL SAMPLING RESULTS - TOTAL CHLORDANE/TCLP

ARCADIS Project No. GP09MEAD.PEST.HG001
Date AUGUST, 2013

ARCADIS
10 FRIENDS LANE
NEWTOWN, PA 18940
TEL. 267.685.1800

3

CITY: NEWTOWN, PA / CRANBURY-NJ DIV/GROUP: ENVCAD LD: M. WASILEWSKI/JMEYER PIC: T.TALELE PM: T.LLEWLLYN TM: W.KAHL LYR:ON=*;OFF=*REF*
G:\ENVCAD\CRANBURY\RETURN-TO\Newtown-PA\GP09MEAD\PEST\HG001\CONTRACT\GP09MEADG10.dwg LAYOUT: 3 SAVED: 10/10/2013 5:21 PM ACADVER: 18.1S (LMS TECH) PAGESETUP: ---- PLOTSTYLETABLE: ---- PLOTTED: 10/10/2013 5:22 PM BY: MEYER, JULIE
XREFS: GP09MEADX01 GP09MEADX00 IMAGES: ---- PROJECTNAME: ----

NOTE:

1. SEE DRAWING 1 FOR GENERAL NOTES, LEGEND, AND ABBREVIATIONS.
2. THE CONTRACTOR SHALL INSTALL EROSION AND SEDIMENT CONTROLS IN ACCORDANCE WITH THE EROSION AND SEDIMENT CONTROL PLAN PRIOR TO INITIATION OF LAND DISTURBING ACTIVITIES.
3. THE FOLLOWING SHALL BE IDENTIFIED AND MARKED PRIOR TO INITIATION OF INTRUSIVE OR LAND DISTURBING ACTIVITIES: LIMITS OF DISTURBANCE, UTILITIES, HORIZONTAL EXCAVATION BOUNDARIES, EXCLUSION ZONE, CONTAMINANT REDUCTION ZONE, AND SUPPORT ZONES. SUITABLE MARKING WILL CONSIST OF PIN-FLAGS, STAKES, CONES, TEMPORARY ORANGE SAFETY FENCING, OR TEMPORARY PAINT.
4. THE CONTRACTOR SHALL INSTALL STABILIZED CONSTRUCTION ENTRANCES ON GORDON STREET AND TAYLOR AVENUE AS DEPICTED ON THE DESIGN DRAWINGS AND THE EROSION AND SEDIMENT CONTROL PLAN.
5. THE CONTRACTOR SHALL COORDINATE THE RELOCATION AND REMOVAL OF STORED EQUIPMENT LOCATED WITHIN THE WORK AREA.
6. THE CONTRACTOR SHALL BE RESPONSIBLE FOR IDENTIFYING AND VERIFYING THE LOCATION OF UTILITIES LOCATED WITHIN THE LIMITS OF DISTURBANCE.
7. UTILITIES ENTERING THE SITE AT THE EASTERN SITE BOUNDARY SHALL BE DE-ENERGIZED AND DECOMMISSIONED AT THE LIMITS OF DISTURBANCE. UTILITIES WITHIN THE EXCAVATION SHALL BE REMOVED. ALL UTILITY WORK WILL BE COMPLETED BY AN INDUSTRY CERTIFIED TECHNICIAN.
8. THE CONTRACTOR SHALL UTILIZE AVAILABLE SPACE TO CONSTRUCT STAGING AREAS NECESSARY TO SUPPORT EXCAVATION ACTIVITIES. THE LOCATION AND EXTENT OF THE STAGING AREAS WILL BE FIELD DETERMINED.
9. MW-2R WILL BE ABANDONED PRIOR TO DISTURBING THE WELL. WELL ABANDONMENT WILL BE CONDUCTED BY A MARYLAND CERTIFIED WELL DRILLER IN ACCORDANCE WITH STATE REGULATIONS. UPON COMPLETION OF SITE RESTORATION, A REPLACEMENT MONITORING WELL WILL BE INSTALLED WITHIN THE SAME LOCATION.
10. ALL TRUCKS SHALL REMAIN ON THE TRUCKING ROUTES IDENTIFIED IN THE TRAFFIC CONTROL PLAN.
11. CONTRACTOR SHALL INSTALL TRAFFIC SAFETY DEVICES IN ACCORDANCE WITH THE TRAFFIC CONTROL PLAN.

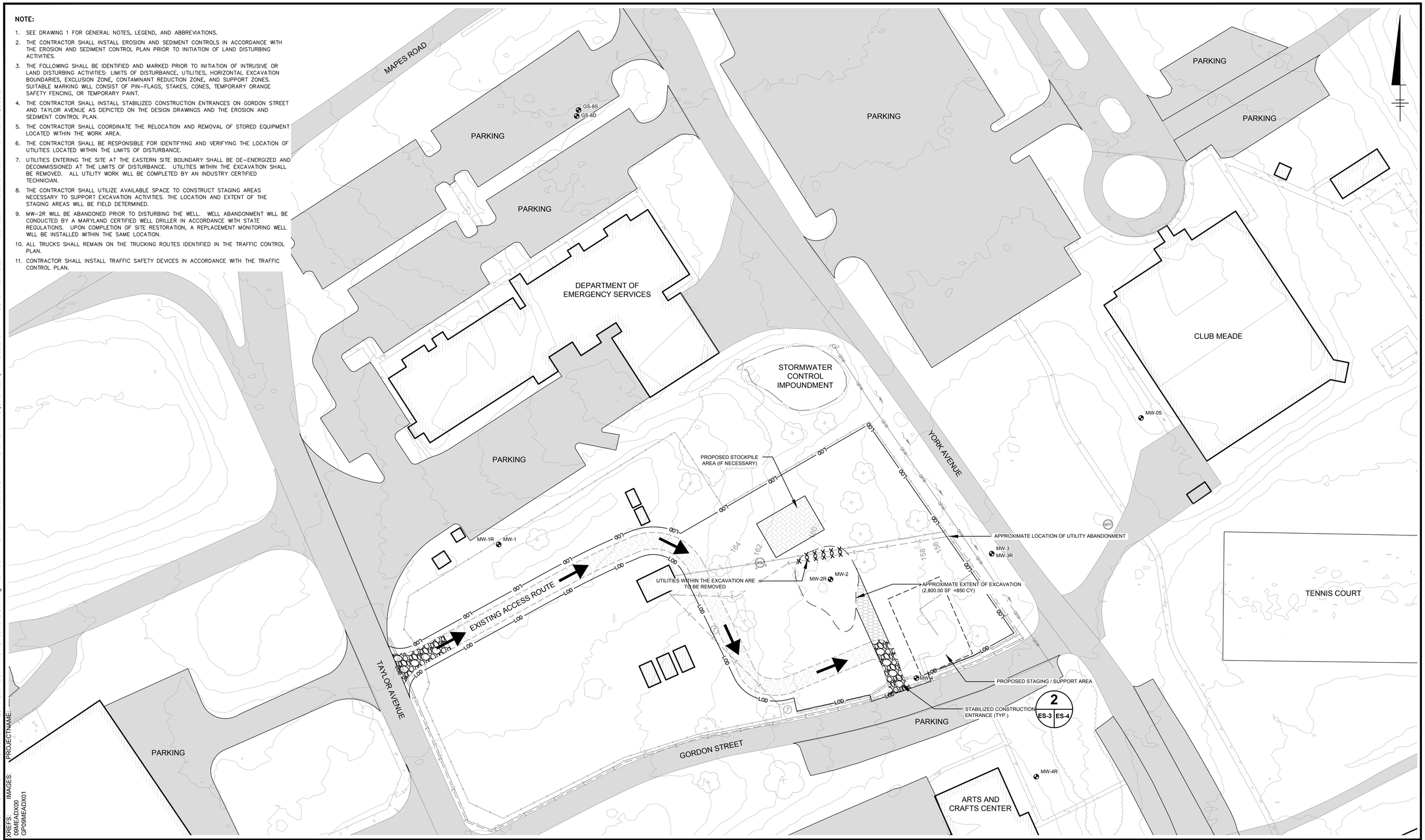

0 40' 80'
GRAPHIC SCALE

THIS BAR REPRESENTS ONE INCH ON THE ORIGINAL DRAWING: USE TO VERIFY FIGURE REPRODUCTION SCALE

No.	Date	Revisions	By	Ckd
1	7/2013	UPDATE SITE FEATURES AND NOTES	JAM	AD

THIS DRAWING IS THE PROPERTY OF THE ARCADIS ENTITY IDENTIFIED IN THE TITLE BLOCK AND MAY NOT BE REUSED OR ALTERED IN WHOLE OR IN PART WITHOUT THE EXPRESS WRITTEN PERMISSION OF SAME.

Professional Engineer's Name
DAVID ANTHONY CABALLERO
Professional Engineer's No.
22777

State	Date Signed	Project Mgr.
MD		TC
Designed by	Drawn by	Checked by
RK	MW/JM	DC

ARCADIS
ARCADIS U.S., INC.

FGGM13 FORMER PESTICIDE SHOP, BUILDING 6621 ● FORT MEADE, MARYLAND
REMEDIAL DESIGN EXCAVATION AND SITE GRADING

SITE PREPARATION PLAN

ARCADIS Project No.
GP09MEAD.PEST.HG001

Date
AUGUST, 2013

ARCADIS
10 FRIENDS LANE
NEWTOWN, PA 18940
TEL. 267.685.1800

4

CITY: NEWTOWN, PA / CRANBURY-NJ DIV/GROUP: ENVCAD LD: M. WASILEWSKI/JMEYER PIC: T.TALELE PM: T.LLEWLLYN TM: W.KAHL LYR:ON=*;OFF=*REF*
G:\ENVCAD\CRANBURY\RETURN-TO\Newtown-PA\GP09MEAD\PEST\HG001\CONTRACT\GP09MEADG07.dwg LAYOUT: 4 SAVED: 11/8/2013 9:31 AM ACADVER: 18.1S (LMS TECH) PAGESETUP: ---- PLOTSTYLETABLE: ---- PLOTTED: 11/13/2013 10:52 AM BY: MEYER, JULIE
XREFS: 09MEADX00 GP09MEADX01 IMAGES: PROJECTNAME:

NOTES:

1. SEE DRAWING 1 FOR GENERAL NOTES, LEGEND, AND ABBREVIATIONS.
2. THE CONTRACTOR SHALL EXCAVATE TO 14 FEET BELOW GROUND SURFACE (FT BGS), AS DEPICTED ON THE DESIGN DRAWINGS.
3. EXCAVATION CONTOURS PRESENTED HEREON WERE DRAFTED FOR PLANNING PURPOSES ONLY. APPROPRIATE SIDE WALL SLOPING/BENCHING WILL BE DETERMINED IN THE FIELD BY THE EXCAVATION COMPETENT PERSON. EXCAVATION STABILIZATION PROCEDURES WILL BE IMPLEMENTED AS DETERMINED BY THE EXCAVATION COMPETENT PERSON.
4. THE OPEN EXCAVATION SHALL NOT BE LEFT UNATTENDED AND SHALL BE SECURED WHEN NOT UNDER DIRECT SUPERVISION (E.G., LUNCH BREAKS AND THE CONCLUSION OF EACH WORK DAY).
5. EXCAVATION DEWATERING WILL BE CONDUCTED IN ACCORDANCE WITH EROSION AND SEDIMENT CONTROL PLAN PRESENTED ON DRAWING ES-2.
6. SOIL STOCKPILING WILL BE CONDUCTED IN ACCORDANCE WITH EROSION AND SEDIMENT CONTROL PLAN PRESENTED ON DRAWING ES-2.
7. THE SITE SHALL BE RESTORED AND REPAIRED TO AN "IN-KIND" CONDITION. FINAL GRADES SHALL MATCH EXISTING GRADES AND WILL MAKE A SMOOTH TRANSITION TO EXISTING TOPOGRAPHY.

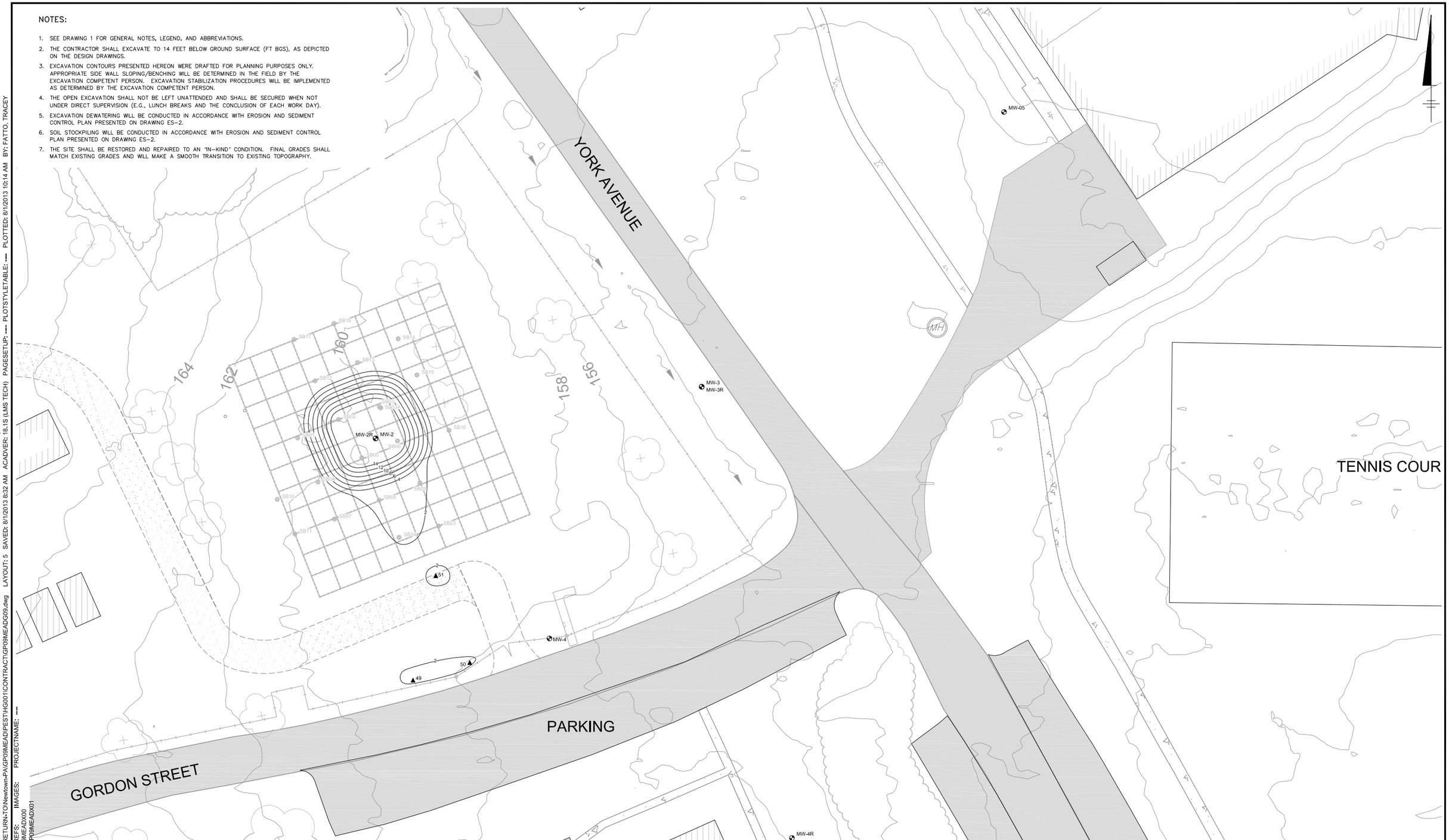

CITY: NEWTOWN, PA / CRANBURY-NJ DIV/GROUP: ENVCAD LD: M. WASILEWSKI/JUMEYER PIC: T.TALELE PM: T.LLEWLLYN TM: W.KAHL LYR:ON=*;OFF=REF*
C:\ENVCAD\CRANBURY\RETURN-TO\Newtown-PA\GP09MEAD\PEST\HG001\CONTRACT\GP09MEADG09.dwg LAYOUT: 5 SAVED: 8/1/2013 8:32 AM ACADVER: 18.1S (LMS TECH) PAGESETUP: ---- PLOTSTYLETABLE: ---- PLOTTED: 8/1/2013 10:14 AM BY: FATTO, TRACEY
XREFS: 09MEADX00 GP09MEADX01 IMAGES: PROJECTNAME: ----

0 20' 40'
GRAPHIC SCALE

THIS BAR REPRESENTS ONE INCH ON THE ORIGINAL DRAWING: USE TO VERIFY FIGURE REPRODUCTION SCALE

No.	Date	Revisions	By	Ckd
1	7/2013	UPDATE SITE FEATURES AND NOTES	JAM	AD

THIS DRAWING IS THE PROPERTY OF THE ARCADIS ENTITY IDENTIFIED IN THE TITLE BLOCK AND MAY NOT BE REUSED OR ALTERED IN WHOLE OR IN PART WITHOUT THE EXPRESS WRITTEN PERMISSION OF SAME.

Professional Engineer's Name: DAVID ANTHONY CABALLERO
Professional Engineer's No.: 22777

State	Date Signed	Project Mgr.
MD		TC
Designed by	Drawn by	Checked by
RK	MW/JM	DC

ARCADIS

ARCADIS U.S., INC.

FGGM13 FORMER PESTICIDE SHOP, BUILDING 6621 • FORT MEADE, MARYLAND
REMEDIAL DESIGN EXCAVATION AND SITE GRADING

EXCAVATION PLAN

ARCADIS Project No. GP09MEAD.PEST.HG001

Date AUGUST, 2013

ARCADIS
10 FRIENDS LANE
NEWTOWN, PA 18940
TEL. 267.885.1800

5

CITY: NEWTOWN, PA/CRANBURY-NJ DIV/GROUP: ENVCAD DB: A. SAMIOS/JMEYER LD: M. WASILEWSKI PIC: T. TALELE PM: T. LLEWELLYN TM: W.KAHL LYR:ON=*;OFF=*REF*
C:\ENVCAD\CRANBURY\RETURN-TO\Newtown-PA\GP09MEAD\PESTTHG001\CONTRACT\GP09MEAD_01.dwg LAYOUT: COVER SAVED: 8/1/2013 8:34 AM ACADVER: 18.1S (LMS TECH) PAGESETUP: ---- PLOTSTYLETABLE: ARCADIS.CTB PLOTTED: 8/1/2013 8:34 AM BY: FATTO, TRACEY

EROSION AND SEDIMENT CONTROL PERMIT DRAWINGS

REMEDIAL DESIGN

FGGM13 FORMER PESTICIDE SHOP
FORT MEADE, MARYLAND

MDE PLAN REVIEW # 13-WM-006

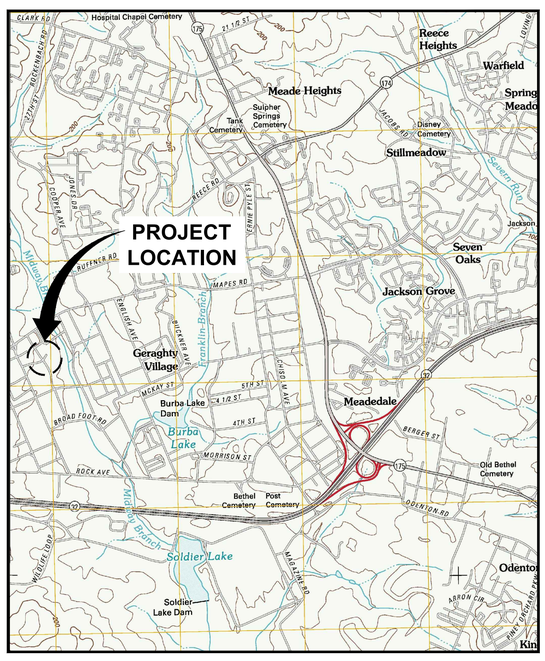

REFERENCE: BASE MAP USGS 7.5 MINUTE QUADRANGLE., ODENTON, MD, 2011.

LOCATION MAP

0 2000' 4000'
GRAPHIC SCALE

MARYLAND

DATE ISSUED / DATE REVISED

AUGUST 2013

US ARMY ENVIRONMENTAL COMMAND
FORT MEADE, MARYLAND

ARCADIS

ARCADIS U.S., INC.

INDEX TO DRAWINGS

	GENERAL
	COVER SHEET
1	GENERAL NOTES, LEGEND, AND ABBREVIATIONS
2	EXISTING CONDITIONS
3	PRE-EXCAVATION SOIL SAMPLING RESULTS - TOTAL CHLORDANE/TCLP
4	SITE PREPARATION PLAN
5	EXCAVATION PLAN
	EROSION SEDIMENT CONTROL PERMIT
ES-1	EROSION AND SEDIMENT CONTROL NOTES AND LEGEND
ES-2	EROSION AND SEDIMENT CONTROL NOTES AND TABLES
ES-3	EROSION AND SEDIMENT CONTROL PLAN
ES-4	EROSION AND SEDIMENT CONTROL DETAILS
ES-5	FINAL GRADING AND RESOTRATION

STANDARD EROSION AND SEDIMENT CONTROL NOTES:

THE WATER MANAGEMENT ADMINISTRATION REQUIRES THAT THESE NOTES, IN THEIR ENTIRETY, BE INCLUDED ON THE EROSION AND SEDIMENT CONTROL PLAN. IT IS RECOGNIZED THAT EVERY NOTE MAY NOT APPLY TO ALL PROJECTS. THE REQUIREMENT OF ANY INDIVIDUAL NOTE NOT APPLICABLE TO THE SUBJECT PROJECT IS NOT BINDING UPON THE APPLICANT OR THE APPLICANT'S CONTRACTOR.

1. THE CONTRACTOR SHALL NOTIFY THE ADMINISTRATION (WMA) AT (410) 537-3510 SEVEN (7) DAYS BEFORE COMMENCING ANY LAND DISTURBING ACTIVITY AND, UNLESS WAIVED BY THE ADMINISTRATION, SHALL BE REQUIRED TO HOLD A PRE-CONSTRUCTION MEETING BETWEEN PROJECT REPRESENTATIVES AND A REPRESENTATIVE OF WMA.

2. THE CONTRACTOR MUST NOTIFY WMA IN WRITING AND BY TELEPHONE AT THE FOLLOWING POINTS:
   A. THE REQUIRED PRE-CONSTRUCTION MEETING.
   B. FOLLOWING INSTALLATION OF SEDIMENT CONTROL MEASURES.
   C. DURING THE INSTALLATION OF SEDIMENT BASINS (TO BE CONVERTED INTO PERMANENT STORMWATER MANAGEMENT STRUCTURES) AT THE REQUIRED INSPECTION POINTS (SEE INSPECTION CHECKLIST ON PLAN). NOTIFICATION PRIOR TO COMMENCING CONSTRUCTION OF EACH STEP IS MANDATORY.
   D. PRIOR TO REMOVAL OR MODIFICATION OF ANY SEDIMENT CONTROL STRUCTURE(S).
   E. PRIOR TO REMOVAL OF ALL SEDIMENT CONTROL DEVICES.
   F. PRIOR TO FINAL ACCEPTANCE.

3. THE CONTRACTOR SHALL CONSTRUCT ALL EROSION AND SEDIMENT CONTROL MEASURES PER THE APPROVED PLAN AND CONSTRUCTION SEQUENCE AND SHALL HAVE THEM INSPECTED AND APPROVED BY THE AGENCY INSPECTOR OR WMA INSPECTOR PRIOR TO BEGINNING ANY OTHER LAND DISTURBANCES. MINOR SEDIMENT CONTROL DEVICE LOCATION ADJUSTMENTS MAY BE MADE IN THE FIELD WITH THE APPROVAL OF THE WMA INSPECTOR. THE CONTRACTOR SHALL ENSURE THAT ALL RUNOFF FROM DISTURBED AREAS IS DIRECTED TO THE SEDIMENT CONTROL DEVICES AND SHALL NOT REMOVE ANY EROSION OR SEDIMENT CONTROL MEASURE WITHOUT PRIOR PERMISSION FROM WMA INSPECTOR AND AGENCY INSPECTOR. THE CONTRACTOR MUST OBTAIN PRIOR AGENCY AND WMA APPROVAL FOR CHANGES TO THE SEDIMENT CONTROL PLAN AND / OR SEQUENCE OF CONSTRUCTION.

4. THE CONTRACTOR SHALL PROTECT ALL POINTS OF CONSTRUCTION INGRESS AND EGRESS TO PREVENT THE DEPOSITION OF MATERIALS ONTO PUBLIC ROADS. ALL MATERIALS DEPOSITED ONTO PUBLIC ROADS SHALL BE REMOVED IMMEDIATELY.

5. THE CONTRACTOR SHALL INSPECT DAILY AND MAINTAIN CONTINUOUSLY IN AN EFFECTIVE OPERATING CONDITION ALL EROSION AND SEDIMENT CONTROL MEASURES UNTIL SUCH TIMES AS THEY ARE REMOVED WITH PRIOR PERMISSION FROM WMA INSPECTOR AND AGENCY INSPECTOR.

6. ALL SEDIMENT BASINS, TRAP EMBANKMENTS AND SLOPES, PERIMETER DIKES, SWALES AND ALL DISTURBED SLOPES STEEPER OR EQUAL TO 3:1 SHALL BE STABILIZED WITH SOD OR SEED AND ANCHORED STRAW MULCH, OR OTHER APPROVED STABILIZATION MEASURES, AS SOON AS POSSIBLE BUT NO LATER THAN THREE (3) CALENDAR DAYS AFTER ESTABLISHMENT. ALL AREAS DISTURBED OUTSIDE OF THE PERIMETER SEDIMENT CONTROL SYSTEM MUST BE MINIMIZED. MAINTENANCE MUST BE PERFORMED AS NECESSARY TO ENSURE CONTINUED STABILIZATION.

7. THE CONTRACTOR SHALL APPLY SOD OR SEED AND ANCHORED STRAW MULCH, OR OTHER APPROVED STABILIZATION MEASURES TO ALL DISTURBED AREAS AND STOCKPILES WITHIN SEVEN (7) CALENDAR DAYS AFTER STRIPPING AND GRADING ACTIVITIES HAVE CEASED IN THE AREA. MAINTENANCE SHALL BE PERFORMED AS NECESSARY TO ENSURE CONTINUED STABILIZATION.

8. PRIOR TO REMOVAL OF SEDIMENT CONTROL MEASURES, THE CONTRACTOR SHALL STABILIZE AND HAVE ESTABLISHED PERMANENT STABILIZATION FOR ALL CONTRIBUTORY DISTURBED AREAS USING SOD OR AN APPROVED PERMANENT SEED MIXTURE WITH REQUIRED SOIL AMENDMENTS AND AN APPROVED ANCHORED MULCH. WOOD FIBER MULCH MAY ONLY BE USED IN SEEDING SEASON WHERE THE SLOPE DOES NOT EXCEED 10% AND GRADING HAS BEEN DONE TO PROMOTE SHEET FLOW DRAINAGE. AREAS BROUGHT TO FINISHED GRADE DURING THE SEEDING SEASON SHALL BE PERMANENTLY STABILIZED AS SOON AS POSSIBLE, BUT NOT LATER THAN FOURTEEN (14) CALENDAR DAYS AFTER ESTABLISHMENT. WHEN PROPERTY IS BROUGHT TO FINISHED GRADE DURING THE MONTHS OF NOVEMBER THROUGH FEBRUARY, AND PERMANENT STABILIZATION IS FOUND TO BE IMPRACTICAL, TEMPORARY SEED AND ANCHORED STRAW MULCH SHALL BE APPLIED TO DISTURBED AREAS. THE FINAL PERMANENT STABILIZATION OF SUCH PROPERTY SHALL BE APPLIED BY MARCH 15 OR EARLIER IF GROUND AND WEATHER CONDITIONS ALLOW.

9. THE SITE'S APPROVAL LETTER, APPROVED EROSION AND SEDIMENT CONTROL PLANS, DAILY LOG BOOKS, AND TEST REPORTS SHALL BE AVAILABLE AT THE SITE FOR INSPECTION BY DULY AUTHORIZED OFFICIALS OF WMA AND THE AGENCY RESPONSIBLE FOR PROJECT.

10. SURFACE DRAINAGE FLOWS OVER UNSTABILIZED CUT AND FILL SLOPES SHALL BE CONTROLLED BY EITHER PREVENTING DRAINAGE FLOWS FROM TRAVERSING THE SLOPES OR BY INSTALLING PROTECTIVE DEVICES TO LOWER THE WATER DOWNSLOPE WITHOUT CAUSING EROSION. DIKES SHALL BE INSTALLED AND MAINTAINED AT THE TOP OF A CUT OR FILL SLOPE UNTIL THE SLOPE AND DRAINAGE AREA TO IT ARE FULLY STABILIZED, AT WHICH TIME THEY MUST BE REMOVED AND FINAL GRADING DONE TO PROMOTE SHEET FLOW DRAINAGE. PROTECTIVE METHODS MUST BE PROVIDED AT POINTS OF CONCENTRATED FLOW WHERE EROSION IS LIKELY TO OCCUR.

11. PERMANENT SWALES OR OTHER POINTS OF CONCENTRATED WATER FLOW SHALL BE STABILIZED WITH SOD OR SEED WITH AN APPROVED EROSION CONTROL MATTING, RIP-RAP, OR BY OTHER APPROVED STABILIZATION MEASURES.

12. TEMPORARY SEDIMENT CONTROL DEVICES MAY BE REMOVED, WITH PERMISSION OF WMA INSPECTOR AND AGENCY INSPECTORS, WITHIN THIRTY (30) CALENDAR DAYS FOLLOWING ESTABLISHMENT OF PERMANENT STABILIZATION IN ALL CONTRIBUTORY DRAINAGE AREAS. STORMWATER MANAGEMENT STRUCTURES USED TEMPORARILY FOR SEDIMENT CONTROL SHALL BE CONVERTED TO THE PERMANENT CONFIGURATION WITHIN THIS TIME PERIOD AS WELL.

13. NO PERMANENT CUT OR FILL SLOPE WITH A GRADIENT STEEPER THAN 3:1 WILL BE PERMITTED IN LAWN MAINTENANCE AREAS. A SLOPE GRADIENT OF UP TO 2:1 WILL BE PERMITTED IN NON-MAINTENANCE AREAS PROVIDED THAT THOSE AREAS ARE INDICATED ON THE EROSION AND SEDIMENT CONTROL PLAN WITH A LOW-MAINTENANCE GROUND COVER SPECIFIED FOR PERMANENT STABILIZATION. SLOPE GRADIENT STEEPER THAN 2:1 WILL NOT BE PERMITTED WITH VEGETATIVE STABILIZATION.

14. FOR FINISHED GRADING, THE CONTRACTOR SHALL PROVIDE ADEQUATE GRADIENTS TO PREVENT WATER FROM PONDING FOR MORE THAN TWENTY FOUR (24) HOURS AFTER THE END OF A RAINFALL EVENT. DRAINAGE COURSES AND SWALE FLOW AREAS MAY TAKE AS LONG AS FORTY-EIGHT (48) HOURS AFTER THE END OF A RAINFALL EVENT TO DRAIN. AREAS DESIGNED TO HAVE STANDING WATER SHALL NOT BE REQUIRED TO MEET THIS REQUIREMENT.

15. SEDIMENT TRAPS OR BASINS ARE NOT PERMITTED WITHIN 20 FEET OF A FOUNDATION THAT EXISTS OR IS UNDER CONSTRUCTION. NO STRUCTURE MAY BE CONSTRUCTED WITHIN 20 FEET OF AN ACTIVE SEDIMENT TRAP OR BASIN.

16. THE WMA INSPECTOR HAS THE OPTION OF REQUIRING ADDITIONAL SAFETY OR SEDIMENT CONTROL MEASURES, IF DEEMED NECESSARY.

17. ALL TRAP DEPTH DIMENSIONS ARE RELATIVE TO THE OUTLET ELEVATION. ALL TRAPS MUST HAVE A STABLE OUTFALL. ALL TRAPS AND BASINS SHALL HAVE STABLE INFLOW POINTS.

18. VEGETATIVE STABILIZATION SHALL BE PERFORMED IN ACCORDANCE WITH THE STANDARDS AND SPECIFICATIONS FOR SOIL EROSION AND SEDIMENT CONTROL. REFER TO APPROPRIATE SPECIFICATIONS FOR TEMPORARY SEEDING, PERMANENT SEEDING, MULCHING, SODDING, AND GROUND COVERS.

19. SEDIMENT SHALL BE REMOVED AND THE TRAP OR BASIN RESTORED TO ITS ORIGINAL DIMENSIONS WHEN THE SEDIMENT HAS ACCUMULATED TO ONE QUARTER OF THE TOTAL DEPTH OF THE TRAP OR BASIN. TOTAL DEPTH SHALL BE MEASURED FROM THE TRAP OR BASIN BOTTOM TO THE CREST OF THE OUTLET.

20. SEDIMENT REMOVED FROM TRAPS (AND BASINS) SHALL BE PLACED AND STABILIZED IN APPROVED AREAS, BUT NOT WITHIN A FLOODPLAIN, WETLAND OR TREE-SAVE AREA. WHEN PUMPING SEDIMENT LADEN WATER, THE DISCHARGE MUST BE DIRECTED TO A SEDIMENT TRAPPING DEVICE PRIOR TO RELEASE FROM THE SITE. A SUMP PIT MAY BE USED IF SEDIMENT TRAPS THEMSELVES ARE BEING PUMPED OUT.

21. ALL WATER REMOVED FROM EXCAVATED AREAS SHALL BE PASSED THROUGH A WMA APPROVED DEWATERING PRACTICE OR PUMPED TO A SEDIMENT TRAP OR BASIN PRIOR TO DISCHARGE TO A FUNCTIONAL STORM DRAIN SYSTEM OR TO STABLE GROUND SURFACE.

22. SEDIMENT CONTROL FOR UTILITY CONSTRUCTION FOR AREAS OUTSIDE OF DESIGNED CONTROLS OR AS DIRECTED BY ENGINEER OR WMA INSPECTOR:
   A. CALL "MISS UTILITY" AT 1-800-257-7777 48 HOURS PRIOR TO THE START OF WORK.
   B. EXCAVATED TRENCH MATERIAL SHALL BE PLACED ON THE HIGH SIDE OF THE TRENCH.
   C. TRENCHES FOR UTILITY INSTALLATION SHALL BE BACKFILLED, COMPACTED, AND STABILIZED AT THE END OF EACH WORKING DAY. NO MORE TRENCH SHALL BE OPENED THAN CAN BE COMPLETED THE SAME DAY, UNLESS;
   D. TEMPORARY SILT FENCE SHALL BE PLACED IMMEDIATELY DOWNSTREAM OF ANY DISTURBED AREA INTENDED TO REMAIN DISTURBED FOR MORE THAN ONE DAY.

23. WHERE DEEMED APPROPRIATE BY THE ENGINEER OR INSPECTOR, SEDIMENT BASINS AND TRAPS MAY NEED TO BE SURROUNDED WITH AN APPROVED SAFETY FENCE. THE FENCE MUST CONFORM TO LOCAL ORDINANCES AND REGULATIONS. THE DEVELOPER OR OWNER SHALL CHECK WITH LOCAL BUILDING OFFICIALS ON APPLICABLE SAFETY REQUIREMENTS. WHERE SAFETY FENCE IS DEEMED APPROPRIATE AND LOCAL ORDINANCES DO NOT SPECIFY FENCING SIZES AND TYPES, THE FOLLOWING SHALL BE USED AS A MINIMUM STANDARD: THE SAFETY FENCE MUST BE MADE OF WELDED WIRE AND AT LEAST 42 INCHES HIGH, HAVE POSTS SPACED NO FARTHER APART THAN 8 FEET, HAVE MESH OPENINGS NO GREATER THAN 2 INCHES IN WIDTH AND 4 INCHES IN HEIGHT WITH A MINIMUM OF 14 GAUGE WIRE. SAFETY FENCE MUST BE MAINTAINED AND IN GOOD CONDITION AT ALL TIMES.

24. OFF-SITE SPOIL OR BORROW AREAS ON STATE OR FEDERAL PROPERTY MUST HAVE PRIOR APPROVAL BY WMA AND OTHER APPLICABLE STATE, FEDERAL, AND LOCAL AGENCIES; OTHERWISE APPROVAL MUST BE GRANTED BY THE LOCAL AUTHORITIES. ALL WASTE AND BORROW AREAS OFF-SITE MUST BE PROTECTED BY SEDIMENT CONTROL MEASURES AND STABILIZED.

25. SITES WHERE INFILTRATION DEVICES ARE USED FOR THE CONTROL OF STORMWATER, EXTREME CARE MUST BE TAKEN TO PREVENT RUNOFF FROM UNSTABILIZED AREAS FROM ENTERING THE STRUCTURE DURING CONSTRUCTION. SEDIMENT CONTROL DEVICES PLACED IN INFILTRATION AREAS MUST HAVE BOTTOM ELEVATIONS AT LEAST TWO (2) FEET HIGHER THAN THE FINISH GRADE BOTTOM ELEVATION OF THE INFILTRATION PRACTICE. WHEN CONVERTING A SEDIMENT TRAP TO AN INFILTRATION DEVICE, ALL ACCUMULATED SEDIMENT MUST BE REMOVED AND DISPOSED OF PRIOR TO FINAL GRADING OF INFILTRATION DEVICE.

26. WHEN A STORM DRAIN SYSTEM OUTFALL IS DIRECTED TO A SEDIMENT TRAP OR SEDIMENT BASIN AND THE SYSTEM IS TO BE USED FOR TEMPORARILY CONVEYING SEDIMENT LADEN WATER, ALL STORM DRAIN INLETS IN NON-SUMP AREAS SHALL HAVE TEMPORARY ASPHALT BERMS CONSTRUCTED AT THE TIME OF BASE PAVING TO DIRECT GUTTER FLOW INTO THE INLETS TO AVOID SURCHARGING AND OVERFLOW OF INLETS IN SUMP AREA.

27. SITE INFORMATION:

a. TOTAL AREA OF FACILITY (BASE, CAMPUS, PARK, ETC.)	2.52 ACRES / 109,605.76 SF
b. AREA DISTURBED	1.23 ACRES / 53,666.70 SF
c. AREA TO BE ROOF OR PAVED	0 ACRES
d. TOTAL CUT	850 CUBIC YARDS
e. TOTAL FILL	850 CUBIC YARDS
f. OFF-SITE WASTE / BORROW AREA LOCATION	KING GEORGE LANDFILL / FT. MEADE SOIL STOCKPILE

OWNER'S/DEVELOPER'S CERTIFICATION

I / WE HEREBY CERTIFY THAT ALL CLEARING, GRADING, CONSTRUCTION, AND/OR DEVELOPMENT WILL BE DONE PURSUANT TO THIS PLAN AND THAT ANY RESPONSIBLE PERSONNEL INVOLVED IN THE CONSTRUCTION PROJECT WILL HAVE A CERTIFICATE OF ATTENDANCE AT A MARYLAND DEPARTMENT OF THE ENVIRONMENT APPROVED TRAINING PROGRAM FOR THE CONTROL OF EROSION AND SEDIMENT BEFORE BEGINNING THE PROJECT. I HEREBY AUTHORIZE THE RIGHT OF ENTRY FOR PERIODIC ON-SITE EVALUATION BY STATE OF MARYLAND, DEPARTMENT OF THE ENVIRONMENT, COMPLIANCE INSPECTORS.

_____ DATE

_____ OWNER / DEVELOPER SIGNATURE

_____ CARD NO.

TEJBIR SINGH, DIRECTOR OF PUBLIC WORKS, FORT GEORGE G. MEADE
MICHAEL P. BUTLER, CHIEF OF ENVIRONMENTAL DIVISION, FORT GEORGE G. MEADE
PRINTED NAME AND TITLE

DESIGN CERTIFICATION

I HEREBY CERTIFY THAT THIS PLAN HAS BEEN DESIGNED IN ACCORDANCE WITH THE 2011 MARYLAND STANDARDS AND SPECIFICATIONS FOR SOIL EROSION AND SEDIMENT CONTROL, THE 2000 MARYLAND STORMWATER DESIGN MANUAL, VOLUMES I & II AND THE MARYLAND DEPARTMENT OF THE ENVIRONMENT EROSION AND SEDIMENT CONTROL AND STORMWATER MANAGEMENT REGULATIONS.

_____ DATE

_____ DESIGNEES SIGNATURE

MD. REGISTRATION NO. 22777
(P.E.) R.L.S., RLA, OR R.A. (CIRCLE ONE)

DAVID ANTHONY CABALLERO
PRINTED NAME

PROFESSIONAL CERTIFICATION

I HEREBY CERTIFY THAT THESE DOCUMENTS WERE PREPARED OR APPROVED BY ME, AND THAT I AM A DULY LICENSED PROFESSIONAL ENGINEER UNDER THE LAWS OF THE STATE OF MARYLAND, LICENSE NO, 22777, EXPIRATION DATE: 07/20/2014

STANDARD STABILIZATION NOTE

FOLLOWING INITIAL SOIL DISTURBANCE OR RE-DISTURBANCE, PERMANENT OR TEMPORARY STABILIZATION MUST BE COMPLETED WITHIN THREE (3) CALENDAR DAYS AS TO THE SURFACE OF ALL PERIMETER CONTROLS, DIKES, SWALES, DITCHES, PERIMETER SLOPES, AND ALL SLOPES GREATER THAN 3 HORIZONTAL TO 1 VERTICAL (3:1); AND SEVEN (7) DAYS AS TO ALL OTHER DISTURBED OR GRADED AREAS ON THE PROJECT SITE.

EROSION AND SEDIMENT CONTROL LEGEND

- 60 — TOPOGRAPHIC CONTOURS
- PROPOSED CONTOURS
- LOD — PROPOSED LIMITS OF DISTURBANCE
- SF — SILT FENCE
- SCE — STABILIZED CONSTRUCTION ENTRANCE
- EQUIPMENT STAGING AREA
- STOCKPILE AREA

GENERAL LEGEND

- STOCKPILE AREA
- PAVEMENT
- LIMITS OF EXCAVATION
- STORMWATER FLOW PATH
- MONITORING WELL
- MH — MANHOLE
- INGRESS EGRESS ROUTE
- 1 — DETAIL/SECTION DESIGNATION
- 5 7 — NUMBER OF SHEET WHERE DETAIL/SECTION IS SHOWN
- NUMBER OF SHEET WHERE DETAIL/SECTION IS CUT

STANDARDS AND SPECIFICATION FOR VEGETATIVE STABILIZATION

NOTE: ALL FIGURE AND TABLE REFERENCES IN THE SECTIONS BELOW REFER TO THE 2011 MARYLAND STANDARD AND SPECIFICATIONS FOR SOIL EROISION AND SEDIMENT CONTROL DATED DECEMBER 2011.

INCREMENTAL STABILIZATION

A. INCREMENTAL STABILIZATION – CUT SLOPES

1. EXCAVATE AND STABILIZE CUT SLOPES IN INCREMENTS NOT TO EXCEED 15 FEET IN HEIGHT. DRESS, PREPARE, SEED AND MULCH ALL CUT SLOPES AS THE WORK PROGRESSES.

2. CONSTRUCTION SEQUENCE EXAMPLE (REFER TO FIGURE B.1):

A. CONSTRUCT AND STABILIZE ALL TEMPORARY SWALES OR DIKES THAT WILL BE USED TO CONVEY RUNOFF AROUND THE EXCAVATION.

B. PERFORM PHASE 1 EXCAVATION, DRESS, AND STABILIZE.

C. PERFORM PHASE 2 EXCAVATION, DRESS, AND STABILIZE. OVERSEED PHASE 1 AREAS AS NECESSARY.

D. PERFORM FINAL PHASE EXCAVATION, DRESS, AND STABILIZE. OVERSEED PREVIOUSLY SEEDED AREAS AS NECESSARY.

NOTE: ONCE EXCAVATION HAS BEGUN THE OPERATION SHOULD BE CONTINUOUS FROM GRUBBING THROUGH THE COMPLETION OF GRADING AND PLACEMENT OF TOPSOIL (IF REQUIRED) AND PERMANENT SEED AND MULCH. ANY INTERRUPTIONS IN THE OPERATION OR COMPLETING THE OPERATION OUT OF THE SEEDING SEASON WILL NECESSITATE THE APPLICATION OF TEMPORARY STABILIZATION.

B. INCREMENTAL STABILIZATION – FILL SLOPES

1. CONSTRUCT AND STABILIZE FILL SLOPES IN INCREMENTS NOT TO EXCEED 15 FEET IN HEIGHT. DRESS, PREPARE, SEED AND MULCH ALL SLOPES AS THE WORK PROGRESSES.

2. STABILIZE SLOPES IMMEDIATELY WHEN THE VERTICAL HEIGHT OF A LIFT REACHES 15 FEET, OR WHEN THE GRADING OPERATION CEASES AS PRESCRIBED IN THE PLANS.

3. AT THE END OF EACH DAY, INSTALL TEMPORARY WATER CONVEYANCE PRACTICE(S), AS NECESSARY, TO INTERCEPT SURFACE RUNOFF AND CONVEY IT DOWN THE SLOPE IN A NON-EROSIVE MANNER.

4. CONSTRUCTION SEQUENCE EXAMPLE (REFER TO FIGURE B.2):

A. CONSTRUCT AND STABILIZE ALL TEMPORARY SWALES OR DIKES THAT WILL BE USED TO DIVERT RUNOFF AROUND THE FILL. CONSTRUCT SILT FENCE ON LOW SIDE OF FILL UNLESS OTHER METHODS SHOWN ON THE PLANS ADDRESS THIS AREA.

B. AT THE END OF EACH DAY, INSTALL TEMPORARY WATER CONVEYANCE PRACTICE(S), AS NECESSARY, TO INTERCEPT SURFACE RUNOFF AND CONVEY IT DOWN THE SLOPE IN A NON-EROSIVE MANNER.

C. PLACE PHASE 1 FILL, DRESS, AND STABILIZE.

D. PLACE PHASE 2 FILL, DRESS, AND STABILIZE.

E. PLACE FINAL PHASE FILL, DRESS, AND STABILIZE. OVERSEED PREVIOUSLY SEEDED AREAS AS NECESSARY.

NOTE: ONCE THE PLACEMENT OF FILL HAS BEGUN THE OPERATION SHOULD BE CONTINUOUS FROM GRUBBING THROUGH THE COMPLETION OF GRADING AND PLACEMENT OF TOPSOIL (IF REQUIRED) AND PERMANENT SEED AND MULCH. ANY INTERRUPTIONS IN THE OPERATION OR COMPLETING THE OPERATION OUT OF THE SEEDING SEASON WILL NECESSITATE THE APPLICATION OF TEMPORARY STABILIZATION.

SOIL PREPARATION, TOPSOILING, AND SOIL AMENDMENTS

A. SOIL PREPARATION

1. TEMPORARY STABILIZATION

A. SEEDBED PREPARATION CONSISTS OF LOOSENING SOIL TO A DEPTH OF 3 TO 5 INCHES BY MEANS OF SUITABLE AGRICULTURAL OR CONSTRUCTION EQUIPMENT, SUCH AS DISC HARROWS OR CHISEL PLOWS OR RIPPERS MOUNTED ON CONSTRUCTION EQUIPMENT. AFTER THE SOIL IS LOOSENED, IT MUST NOT BE ROLLED OR DRAGGED SMOOTH BUT LEFT IN THE ROUGHENED CONDITION. SLOPES 3:1 OR FLATTER ARE TO BE TRACKED WITH RIDGES RUNNING PARALLEL TO THE CONTOUR OF THE SLOPE.

B. APPLY FERTILIZER AND LIME AS PRESCRIBED ON THE PLANS.

C. INCORPORATE LIME AND FERTILIZER INTO THE TOP 3 TO 5 INCHES OF SOIL BY DISKING OR OTHER SUITABLE MEANS.

2. PERMANENT STABILIZATION

A. A SOIL TEST IS REQUIRED FOR ANY EARTH DISTURBANCE OF 5 ACRES OR MORE. THE MINIMUM SOIL CONDITIONS REQUIRED FOR PERMANENT VEGETATIVE ESTABLISHMENT ARE:

I. SOIL PH BETWEEN 6.0 AND 7.0.

II. SOLUBLE SALTS LESS THAN 500 PARTS PER MILLION (PPM).

III. SOIL CONTAINS LESS THAN 40 PERCENT CLAY BUT ENOUGH FINE GRAINED MATERIAL (GREATER THAN 30 PERCENT SILT PLUS CLAY) TO PROVIDE THE CAPACITY TO HOLD A MODERATE AMOUNT OF MOISTURE. AN EXCEPTION: IF LOVEGRASS WILL BE PLANTED, THEN A SANDY SOIL (LESS THAN 30 PERCENT SILT PLUS CLAY) WOULD BE ACCEPTABLE.

IV. SOIL CONTAINS 1.5 PERCENT MINIMUM ORGANIC MATTER BY WEIGHT.

V. SOIL CONTAINS SUFFICIENT PORE SPACE TO PERMIT ADEQUATE ROOT PENETRATION.

B. APPLICATION OF AMENDMENTS OR TOPSOIL IS REQUIRED IF ON-SITE SOILS DO NOT MEET THE ABOVE CONDITIONS.

C. GRADED AREAS MUST BE MAINTAINED IN A TRUE AND EVEN GRADE AS SPECIFIED ON THE APPROVED PLAN, THEN SCARIFIED OR OTHERWISE LOOSENED TO A DEPTH OF 3 TO 5 INCHES.

D. APPLY SOIL AMENDMENTS AS SPECIFIED ON THE APPROVED PLAN OR AS INDICATED BY THE RESULTS OF A SOIL TEST.

E. MIX SOIL AMENDMENTS INTO THE TOP 3 TO 5 INCHES OF SOIL BY DISKING OR OTHER SUITABLE MEANS. RAKE LAWN AREAS TO SMOOTH THE SURFACE, REMOVE LARGE OBJECTS LIKE STONES AND BRANCHES, AND READY THE AREA FOR SEED APPLICATION. LOOSEN SURFACE SOIL BY DRAGGING WITH A HEAVY CHAIN OR OTHER EQUIPMENT TO ROUGHEN THE SURFACE WHERE SITE CONDITIONS WILL NOT PERMIT NORMAL SEEDBED PREPARATION. TRACK SLOPES 3:1 OR FLATTER WITH TRACKED EQUIPMENT LEAVING THE SOIL IN AN IRREGULAR CONDITION WITH RIDGES RUNNING PARALLEL TO THE CONTOUR OF THE SLOPE. LEAVE THE TOP 1 TO 3 INCHES OF SOIL LOOSE AND FRIABLE. SEEDBED LOOSENING MAY BE UNNECESSARY ON NEWLY DISTURBED AREAS.

B. TOPSOILING

1. TOPSOIL IS PLACED OVER PREPARED SUBSOIL PRIOR TO ESTABLISHMENT OF PERMANENT VEGETATION. THE PURPOSE IS TO PROVIDE A SUITABLE SOIL MEDIUM FOR VEGETATIVE GROWTH. SOILS OF CONCERN HAVE LOW MOISTURE CONTENT, LOW NUTRIENT LEVELS, LOW PH, MATERIALS TOXIC TO PLANTS, AND/OR UNACCEPTABLE SOIL GRADATION.

2. TOPSOIL SALVAGED FROM AN EXISTING SITE MAY BE USED PROVIDED IT MEETS THE STANDARDS AS SET FORTH IN THESE SPECIFICATIONS. TYPICALLY, THE DEPTH OF TOPSOIL TO BE SALVAGED FOR A GIVEN SOIL TYPE CAN BE FOUND IN THE REPRESENTATIVE SOIL PROFILE SECTION IN THE SOIL SURVEY PUBLISHED BY USDA-NRCS.

3. TOPSOILING IS LIMITED TO AREAS HAVING 2:1 OR FLATTER SLOPES WHERE:

A. THE TEXTURE OF THE EXPOSED SUBSOIL/PARENT MATERIAL IS NOT ADEQUATE TO PRODUCE VEGETATIVE GROWTH.

B. THE SOIL MATERIAL IS SO SHALLOW THAT THE ROOTING ZONE IS NOT DEEP ENOUGH TO SUPPORT PLANTS OR FURNISH CONTINUING SUPPLIES OF MOISTURE AND PLANT NUTRIENTS.

C. THE ORIGINAL SOIL TO BE VEGETATED CONTAINS MATERIAL TOXIC TO PLANT GROWTH.

D. THE SOIL IS SO ACIDIC THAT TREATMENT WITH LIMESTONE IS NOT FEASIBLE.

4. AREAS HAVING SLOPES STEEPER THAN 2:1 REQUIRE SPECIAL CONSIDERATION AND DESIGN.

5. TOPSOIL SPECIFICATIONS: SOIL TO BE USED AS TOPSOIL MUST MEET THE FOLLOWING CRITERIA:

A. TOPSOIL MUST BE A LOAM, SANDY LOAM, CLAY LOAM, SILT LOAM, SANDY CLAY LOAM, OR LOAMY SAND. OTHER SOILS MAY BE USED IF RECOMMENDED BY AN AGRONOMIST OR SOIL SCIENTIST AND APPROVED BY THE APPROPRIATE APPROVAL AUTHORITY. TOPSOIL MUST NOT BE A MIXTURE OF CONTRASTING TEXTURED SUBSOILS AND MUST CONTAIN LESS THAN 5 PERCENT BY VOLUME OF CINDERS, STONES, SLAG, COARSE FRAGMENTS, GRAVEL, STICKS, ROOTS, TRASH, OR OTHER MATERIALS LARGER THAN 11/2 INCHES IN DIAMETER.

B. TOPSOIL MUST BE FREE OF NOXIOUS PLANTS OR PLANT PARTS SUCH AS BERMUDA GRASS, QUACK GRASS, JOHNSON GRASS, NUT SEDGE, POISON IVY, THISTLE, OR OTHERS AS SPECIFIED.

C. TOPSOIL SUBSTITUTES OR AMENDMENTS, AS RECOMMENDED BY A QUALIFIED AGRONOMIST OR SOIL SCIENTIST AND APPROVED BY THE APPROPRIATE APPROVAL AUTHORITY, MAY BE USED IN LIEU OF NATURAL TOPSOIL.

6. TOPSOIL APPLICATION

A. EROSION AND SEDIMENT CONTROL PRACTICES MUST BE MAINTAINED WHEN APPLYING TOPSOIL.

B. UNIFORMLY DISTRIBUTE TOPSOIL IN A 5 TO 8 INCH LAYER AND LIGHTLY COMPACT TO A MINIMUM THICKNESS OF 4 INCHES. SPREADING IS TO BE PERFORMED IN SUCH A MANNER THAT SODDING OR SEEDING CAN PROCEED WITH A MINIMUM OF ADDITIONAL SOIL PREPARATION AND TILLAGE. ANY IRREGULARITIES IN THE SURFACE RESULTING FROM TOPSOILING OR OTHER OPERATIONS MUST BE CORRECTED IN ORDER TO PREVENT THE FORMATION OF DEPRESSIONS OR WATER POCKETS.

C. TOPSOIL MUST NOT BE PLACED IF THE TOPSOIL OR SUBSOIL IS IN A FROZEN OR MUDDY CONDITION, WHEN THE SUBSOIL IS EXCESSIVELY WET OR IN A CONDITION THAT MAY OTHERWISE BE DETRIMENTAL TO PROPER GRADING AND SEEDBED PREPARATION.

CITY: NEWTOWN, PA / CRANBURY-NJ DIV/GROUP: ENVCAD LD: M. WASILEWSKI/JMEYER PIC: T.TALELE PM: T.LLEWLLYN TM: W.KAHL LYR:ON=*;OFF=REF*
C:\ENVCAD\CRANBURY\RETURN-TO\Newtown-PA\GP09MEAD\PEST\HG001\CONTRACT\GP09MEADN01.dwg LAYOUT: ES-1 SAVED: 8/1/2013 8:35 AM ACADVER: 18.1S (LMS TECH) PAGESETUP: ---- PLOTSTYLETABLE: ---- PLOTTED: 8/1/2013 10:16 AM BY: FATTO, TRACEY
XREFS: 09MEADX00 IMAGES: PROJECTNAME: ----

THIS BAR REPRESENTS ONE INCH ON THE ORIGINAL DRAWING: USE TO VERIFY FIGURE REPRODUCTION SCALE

No.	Date	Revisions	By	Ckd
1	7/2013	UPDATE SITE FEATURES AND NOTES	JAM	AD

THIS DRAWING IS THE PROPERTY OF THE ARCADIS ENTITY IDENTIFIED IN THE TITLE BLOCK AND MAY NOT BE REUSED OR ALTERED IN WHOLE OR IN PART WITHOUT THE EXPRESS WRITTEN PERMISSION OF SAME.

Professional Engineer's Name: DAVID ANTHONY CABALLERO
Professional Engineer's No.: 22777

State	Date Signed	Project Mgr.
MD		TC
Designed by RK	Drawn by MW/JM	Checked by DC

ARCADIS
ARCADIS U.S., INC.

FGGM13 FORMER PESTICIDE SHOP, BUILDING 6621 • FORT MEADE, MARYLAND
REMEDIAL DESIGN EXCAVATION AND SITE GRADING

EROSION AND SEDIMENT CONTROL NOTES AND LEGEND

ARCADIS Project No. GP09MEAD,PEST.HG001
Date AUGUST, 2013

ARCADIS
10 FRIENDS LANE
NEWTOWN, PA 18940
TEL. 267.685.1800

ES-1

CITY: NEWTOWN, PA / CRANBURY-NJ DIV/GROUP: ENVCAD LD: M. WASILEWSKI/MEYER PIC: T.TALELE PM: T.LLEWLLYN TM: W.KAHL LYR:ON=*;OFF=*REF* PAGESETUP: ---- PLOTSTYLETABLE: ---- PLOTTED: 8/1/2013 8:36 AM BY: FATTO, TRACEY
C:\ENVCAD\CRANBURY\RETURN-TO\Newtown-PA\GP09MEAD\PEST\HG001\CONTRACT\GP09MEADN02.dwg LAYOUT: ES-2 SAVED: 8/1/2013 8:36 AM ACADVER: 18.1S (LMS TECH)
XREFS: 09MEADX00 IMAGES: PROJECTNAME: ----

STANDARDS AND SPECIFICATION FOR VEGETATIVE STABILIZATION (CONTINUED)

C. SOIL AMENDMENTS (FERTILIZER AND LIME SPECIFICATIONS)

1. SOIL TESTS MUST BE PERFORMED TO DETERMINE THE EXACT RATIOS AND APPLICATION RATES FOR BOTH LIME AND FERTILIZER ON SITES HAVING DISTURBED AREAS OF 5 ACRES OR MORE. SOIL ANALYSIS MAY BE PERFORMED BY A RECOGNIZED PRIVATE OR COMMERCIAL LABORATORY. SOIL SAMPLES TAKEN FOR ENGINEERING PURPOSES MAY ALSO BE USED FOR CHEMICAL ANALYSES.

2. FERTILIZERS MUST BE UNIFORM IN COMPOSITION, FREE FLOWING AND SUITABLE FOR ACCURATE APPLICATION BY APPROPRIATE EQUIPMENT. MANURE MAY BE SUBSTITUTED FOR FERTILIZER WITH PRIOR APPROVAL FROM THE APPROPRIATE APPROVAL AUTHORITY. FERTILIZERS MUST ALL BE DELIVERED TO THE SITE FULLY LABELED ACCORDING TO THE APPLICABLE LAWS AND MUST BEAR THE NAME, TRADE NAME OR TRADEMARK AND WARRANTY OF THE PRODUCER.

3. LIME MATERIALS MUST BE GROUND LIMESTONE (HYDRATED OR BURNT LIME MAY BE SUBSTITUTED EXCEPT WHEN HYDROSEEDING) WHICH CONTAINS AT LEAST 50 PERCENT TOTAL OXIDES (CALCIUM OXIDE PLUS MAGNESIUM OXIDE). LIMESTONE MUST BE GROUND TO SUCH FINENESS THAT AT LEAST 50 PERCENT WILL PASS THROUGH A #100 MESH SIEVE AND 98 TO 100 PERCENT WILL PASS THROUGH A #20 MESH SIEVE.

4. LIME AND FERTILIZER ARE TO BE EVENLY DISTRIBUTED AND INCORPORATED INTO THE TOP 3 TO 5 INCHES OF SOIL BY DISKING OR OTHER SUITABLE MEANS.

5. WHERE THE SUBSOIL IS EITHER HIGHLY ACIDIC OR COMPOSED OF HEAVY CLAYS, SPREAD GROUND LIMESTONE AT THE RATE OF 4 TO 8 TONS/ACRE (200–400 POUNDS PER 1,000 SQUARE FEET) PRIOR TO THE PLACEMENT OF TOPSOIL.

STANDARDS AND SPECIFICATIONS FOR SEEDING AND MULCHING

A. SEEDING

1. SPECIFICATIONS

A. ALL SEED MUST MEET THE REQUIREMENTS OF THE MARYLAND STATE SEED LAW. ALL SEED MUST BE SUBJECT TO RE–TESTING BY A RECOGNIZED SEED LABORATORY. ALL SEED USED MUST HAVE BEEN TESTED WITHIN THE 6 MONTHS IMMEDIATELY PRECEDING THE DATE OF SOWING SUCH MATERIAL ON ANY PROJECT. REFER TO TABLE B.4 REGARDING THE QUALITY OF SEED. SEED TAGS MUST BE AVAILABLE UPON REQUEST TO THE INSPECTOR TO VERIFY TYPE OF SEED AND SEEDING RATE.

B. MULCH ALONE MAY BE APPLIED BETWEEN THE FALL AND SPRING SEEDING DATES ONLY IF THE GROUND IS FROZEN. THE APPROPRIATE SEEDING MIXTURE MUST BE APPLIED WHEN THE GROUND THAWS.

C. INOCULANTS: THE INOCULANT FOR TREATING LEGUME SEED IN THE SEED MIXTURES MUST BE A PURE CULTURE OF NITROGEN FIXING BACTERIA PREPARED SPECIFICALLY FOR THE SPECIES. INOCULANTS MUST NOT BE USED LATER THAN THE DATE INDICATED ON THE CONTAINER. ADD FRESH INOCULANTS AS DIRECTED ON THE PACKAGE. USE FOUR TIMES THE RECOMMENDED RATE WHEN HYDROSEEDING. NOTE: IT IS VERY IMPORTANT TO KEEP INOCULANT AS COOL AS POSSIBLE UNTIL USED. TEMPERATURES ABOVE 75 TO 80 DEGREES FAHRENHEIT CAN WEAKEN BACTERIA AND MAKE THE INOCULANT LESS EFFECTIVE.

D. SOD OR SEED MUST NOT BE PLACED ON SOIL WHICH HAS BEEN TREATED WITH SOIL STERILANTS OR CHEMICALS USED FOR WEED CONTROL UNTIL SUFFICIENT TIME HAS ELAPSED (14 DAYS MIN.) TO PERMIT DISSIPATION OF PHYTO–TOXIC MATERIALS.

2. APPLICATION

A. DRY SEEDING: THIS INCLUDES USE OF CONVENTIONAL DROP OR BROADCAST SPREADERS.

I. INCORPORATE SEED INTO THE SUBSOIL AT THE RATES PRESCRIBED ON TEMPORARY SEEDING TABLE B.1, PERMANENT SEEDING TABLE B.3, OR SITE–SPECIFIC SEEDING SUMMARIES.

II. APPLY SEED IN TWO DIRECTIONS, PERPENDICULAR TO EACH OTHER. APPLY HALF THE SEEDING RATE IN EACH DIRECTION. ROLL THE SEEDED AREA WITH A WEIGHTED ROLLER TO PROVIDE GOOD SEED TO SOIL CONTACT.

B. DRILL OR CULTIPACKER SEEDING: MECHANIZED SEEDERS THAT APPLY AND COVER SEED WITH SOIL.

I. CULTIPACKING SEEDERS ARE REQUIRED TO BURY THE SEED IN SUCH A FASHION AS TO PROVIDE AT LEAST 1/4 INCH OF SOIL COVERING. SEEDBED MUST BE FIRM AFTER PLANTING.

II. APPLY SEED IN TWO DIRECTIONS, PERPENDICULAR TO EACH OTHER. APPLY HALF THE SEEDING RATE IN EACH DIRECTION.

C. HYDROSEEDING: APPLY SEED UNIFORMLY WITH HYDROSEEDER (SLURRY INCLUDES SEED AND FERTILIZER).

I. IF FERTILIZER IS BEING APPLIED AT THE TIME OF SEEDING, THE APPLICATION RATES SHOULD NOT EXCEED THE FOLLOWING: NITROGEN, 100 POUNDS PER ACRE TOTAL OF SOLUBLE NITROGEN; P2O5 (PHOSPHOROUS), 200 POUNDS PER ACRE; K20 (POTASSIUM), 200 POUNDS PER ACRE.

II. LIME: USE ONLY GROUND AGRICULTURAL LIMESTONE (UP TO 3 TONS PER ACRE MAY BE APPLIED BY HYDROSEEDING). NORMALLY, NOT MORE THAN 2 TONS ARE APPLIED BY HYDROSEEDING AT ANY ONE TIME. DO NOT USE BURNT OR HYDRATED LIME WHEN HYDROSEEDING.

III. MIX SEED AND FERTILIZER ON SITE AND SEED IMMEDIATELY AND WITHOUT INTERRUPTION.

IV. WHEN HYDROSEEDING DO NOT INCORPORATE SEED INTO THE SOIL.

B. MULCHING

1. SPECIFICATIONS (IN ORDER OF PREFERENCE)

A. STRAW CONSISTING OF THOROUGHLY THRESHED WHEAT, RYE, OAT, OR BARLEY AND REASONABLY BRIGHT IN COLOR. STRAW IS TO BE FREE OF NOXIOUS WEED SEEDS AS SPECIFIED IN THE MARYLAND SEED LAW AND NOT MUSTY, MOLDY, CAKED, OR EXCESSIVELY DUSTY. NOTE: USE ONLY STERILE STRAW MULCH IN AREAS WHERE ONE SPECIES OF GRASS IS DESIRED.

B. WOOD CELLULOSE FIBER MULCH (WCFM) CONSISTING OF SPECIALLY PREPARED WOOD CELLULOSE PROCESSED INTO A UNIFORM FIBROUS PHYSICAL STATE.

I. WCFM IS TO BE DYED GREEN OR CONTAIN A GREEN DYE IN THE PACKAGE THAT WILL PROVIDE AN APPROPRIATE COLOR TO FACILITATE VISUAL INSPECTION OF THE UNIFORMLY SPREAD SLURRY.

II. WCFM, INCLUDING DYE, MUST CONTAIN NO GERMINATION OR GROWTH INHIBITING FACTORS.

III. WCFM MATERIALS ARE TO BE MANUFACTURED AND PROCESSED IN SUCH A MANNER THAT THE WOOD CELLULOSE FIBER MULCH WILL REMAIN IN UNIFORM SUSPENSION IN WATER UNDER AGITATION AND WILL BLEND WITH SEED, FERTILIZER AND OTHER ADDITIVES TO FORM A HOMOGENEOUS SLURRY. THE MULCH MATERIAL MUST FORM A BLOTTER–LIKE GROUND COVER, ON APPLICATION, HAVING MOISTURE ABSORPTION AND PERCOLATION PROPERTIES AND MUST COVER AND HOLD GRASS SEED IN CONTACT WITH THE SOIL WITHOUT INHIBITING THE GROWTH OF THE GRASS SEEDLINGS.

IV. WCFM MATERIAL MUST NOT CONTAIN ELEMENTS OR COMPOUNDS AT CONCENTRATION LEVELS THAT WILL BE PHYTO–TOXIC.

V. WCFM MUST CONFORM TO THE FOLLOWING PHYSICAL REQUIREMENTS: FIBER LENGTH OF APPROXIMATELY 10 MILLIMETERS, DIAMETER APPROXIMATELY 1 MILLIMETER, PH RANGE OF 4.0 TO 8.5, ASH CONTENT OF 1.6 PERCENT MAXIMUM AND WATER HOLDING CAPACITY OF 90 PERCENT MINIMUM.

2. APPLICATION: APPLY MULCH TO ALL SEEDED AREAS IMMEDIATELY AFTER SEEDING.

A. WHEN STRAW MULCH IS USED, SPREAD IT OVER ALL SEEDED AREAS AT THE RATE OF 2 TONS PER ACRE TO A UNIFORM LOOSE DEPTH OF 1 TO 2 INCHES. APPLY MULCH TO ACHIEVE A UNIFORM DISTRIBUTION AND DEPTH SO THAT THE SOIL SURFACE IS NOT EXPOSED. WHEN USING A MULCH ANCHORING TOOL, INCREASE THE APPLICATION RATE TO 2.5 TONS PER ACRE.

B. WOOD CELLULOSE FIBER USED AS MULCH MUST BE APPLIED AT A NET DRY WEIGHT OF 1500 POUNDS PER ACRE. MIX THE WOOD CELLULOSE FIBER WITH WATER TO ATTAIN A MIXTURE WITH A MAXIMUM OF 50 POUNDS OF WOOD CELLULOSE FIBER PER 100 GALLONS OF WATER.

3. ANCHORING: PERFORM MULCH ANCHORING IMMEDIATELY FOLLOWING APPLICATION OF MULCH TO MINIMIZE LOSS BY WIND OR WATER. THIS MAY BE DONE BY ONE OF THE FOLLOWING METHODS (LISTED BY PREFERENCE), DEPENDING UPON THE SIZE OF THE AREA AND EROSION HAZARD:

A. A MULCH ANCHORING TOOL IS A TRACTOR DRAWN IMPLEMENT DESIGNED TO PUNCH AND ANCHOR MULCH INTO THE SOIL SURFACE A MINIMUM OF 2 INCHES. THIS PRACTICE IS MOST EFFECTIVE ON LARGE AREAS, BUT IS LIMITED TO FLATTER SLOPES WHERE EQUIPMENT CAN OPERATE SAFELY. IF USED ON SLOPING LAND, THIS PRACTICE SHOULD BE USED ON THE CONTOUR IF POSSIBLE.

B. WOOD CELLULOSE FIBER MAY BE USED FOR ANCHORING STRAW. APPLY THE FIBER BINDER AT A NET DRY WEIGHT OF 750 POUNDS PER ACRE. MIX THE WOOD CELLULOSE FIBER WITH WATER AT A MAXIMUM OF 50 POUNDS OF WOOD CELLULOSE FIBER PER 100 GALLONS OF WATER.

C. SYNTHETIC BINDERS SUCH AS ACRYLIC DLR (AGRO–TACK), DCA–70, PETROSET, TERRA TAX II, TERRA TACK AR OR OTHER APPROVED EQUAL MAY BE USED. FOLLOW APPLICATION RATES AS SPECIFIED BY THE MANUFACTURER. APPLICATION OF LIQUID BINDERS NEEDS TO BE HEAVIER AT THE EDGES WHERE WIND CATCHES MULCH, SUCH AS IN VALLEYS AND ON CRESTS OF BANKS. USE OF ASPHALT BINDERS IS STRICTLY PROHIBITED.

D. LIGHTWEIGHT PLASTIC NETTING MAY BE STAPLED OVER THE MULCH ACCORDING TO MANUFACTURER RECOMMENDATIONS. NETTING IS USUALLY AVAILABLE IN ROLLS 4 TO 15 FEET WIDE AND 300 TO 3,000 FEET LONG.

STANDARDS AND SPECIFICATIONS FOR TEMPORARY STABILIZATION

1. SELECT ONE OR MORE OF THE SPECIES OR SEED MIXTURES LISTED IN TABLE B.1 FOR THE APPROPRIATE PLANT HARDINESS ZONE (FROM FIGURE B.3), AND ENTER THEM IN THE TEMPORARY SEEDING SUMMARY BELOW ALONG WITH APPLICATION RATES, SEEDING DATES AND SEEDING DEPTHS. IF THIS SUMMARY IS NOT PUT ON THE PLAN AND COMPLETED, THEN TABLE B.1 PLUS FERTILIZER AND LIME RATES MUST BE PUT ON THE PLAN.

2. FOR SITES HAVING SOIL TESTS PERFORMED, USE AND SHOW THE RECOMMENDED RATES BY THE TESTING AGENCY. SOIL TESTS ARE NOT REQUIRED FOR TEMPORARY SEEDING.

3. WHEN STABILIZATION IS REQUIRED OUTSIDE OF A SEEDING SEASON, APPLY SEED AND MULCH OR STRAW MULCH ALONE AS PRESCRIBED IN SECTION B–4–3.B.1.A AND MAINTAIN UNTIL THE NEXT SEEDING SEASON.

Temporary Seeding Summary

Hardiness Zone (from Figure B.3): 6b Seed Mixture (from Table B.1): Cool-Season Grasses					Fertilizer Rate (10-20-20)	Lime Rate
No.	Species	Application Rate (lb/ac)	Seeding Dates	Seeding Depths		
1	Annual Ryegrass (Lolium perenne ssp. multiflorum)	40	3/1 -5/15; 8/1-10/15	1 in	436 lb/ac (10 lb/1000 sf)	2 tons/ac (90 lb/1000 sf)
2	Barley (Hordeum vulgare)	96	3/1 -5/15; 8/1-10/15	1/4-1/2 in		

STANDARDS AND SPECIFICATIONS FOR PERMANENT STABILIZATION

A. SEED MIXTURES

1. GENERAL USE

A. SELECT ONE OR MORE OF THE SPECIES OR MIXTURES LISTED IN TABLE B.3 FOR THE APPROPRIATE PLANT HARDINESS ZONE (FROM FIGURE B.3) AND BASED ON THE SITE CONDITION OR PURPOSE FOUND ON TABLE B.2. ENTER SELECTED MIXTURE(S), APPLICATION RATES, AND SEEDING DATES IN THE PERMANENT SEEDING SUMMARY. THE SUMMARY IS TO BE PLACED ON THE PLAN.

B. ADDITIONAL PLANTING SPECIFICATIONS FOR EXCEPTIONAL SITES SUCH AS SHORELINES, STREAM BANKS, OR DUNES OR FOR SPECIAL PURPOSES SUCH AS WILDLIFE OR AESTHETIC TREATMENT MAY BE FOUND IN USDA–NRCS TECHNICAL FIELD OFFICE GUIDE, SECTION 342 – CRITICAL AREA PLANTING.

C. FOR SITES HAVING DISTURBED AREA OVER 5 ACRES, USE AND SHOW THE RATES RECOMMENDED BY THE SOIL TESTING AGENCY.

D. FOR AREAS RECEIVING LOW MAINTENANCE, APPLY UREA FORM FERTILIZER (46–0–0) AT 3 1/2 POUNDS PER 1000 SQUARE FEET (150 POUNDS PER ACRE) AT THE TIME OF SEEDING IN ADDITION TO THE SOIL AMENDMENTS SHOWN IN THE PERMANENT SEEDING SUMMARY.

2. TURFGRASS MIXTURES

A. AREAS WHERE TURFGRASS MAY BE DESIRED INCLUDE LAWNS, PARKS, PLAYGROUNDS, AND COMMERCIAL SITES WHICH WILL RECEIVE A MEDIUM TO HIGH LEVEL OF MAINTENANCE.

B. SELECT ONE OR MORE OF THE SPECIES OR MIXTURES LISTED BELOW BASED ON THE SITE CONDITIONS OR PURPOSE. ENTER SELECTED MIXTURE(S), APPLICATION RATES, AND SEEDING DATES IN THE PERMANENT SEEDING SUMMARY. THE SUMMARY IS TO BE PLACED ON THE PLAN.

I. KENTUCKY BLUEGRASS: FULL SUN MIXTURE: FOR USE IN AREAS THAT RECEIVE INTENSIVE MANAGEMENT. IRRIGATION REQUIRED IN THE AREAS OF CENTRAL MARYLAND AND EASTERN SHORE. RECOMMENDED CERTIFIED KENTUCKY BLUEGRASS CULTIVARS SEEDING RATE: 1.5 TO 2.0 POUNDS PER 1000 SQUARE FEET. CHOOSE A MINIMUM OF THREE KENTUCKY BLUEGRASS CULTIVARS WITH EACH RANGING FROM 10 TO 35 PERCENT OF THE TOTAL MIXTURE BY WEIGHT.

II. KENTUCKY BLUEGRASS/PERENNIAL RYE: FULL SUN MIXTURE: FOR USE IN FULL SUN AREAS WHERE RAPID ESTABLISHMENT IS NECESSARY AND WHEN TURF WILL RECEIVE MEDIUM TO INTENSIVE MANAGEMENT. CERTIFIED PERENNIAL RYEGRASS CULTIVARS/CERTIFIED KENTUCKY BLUEGRASS SEEDING RATE: 2 POUNDS MIXTURE PER 1000 SQUARE FEET. CHOOSE A MINIMUM OF THREE KENTUCKY BLUEGRASS CULTIVARS WITH EACH RANGING FROM 10 TO 35 PERCENT OF THE TOTAL MIXTURE BY WEIGHT.

III. TALL FESCUE/KENTUCKY BLUEGRASS: FULL SUN MIXTURE: FOR USE IN DROUGHT PRONE AREAS AND/OR FOR AREAS RECEIVING LOW TO MEDIUM MANAGEMENT IN FULL SUN TO MEDIUM SHADE. RECOMMENDED MIXTURE INCLUDES; CERTIFIED TALL FESCUE CULTIVARS 95 TO 100 PERCENT, CERTIFIED KENTUCKY BLUEGRASS CULTIVARS 0 TO 5 PERCENT. SEEDING RATE: 5 TO 8 POUNDS PER 1000 SQUARE FEET. ONE OR MORE CULTIVARS MAY BE BLENDED.

IV. KENTUCKY BLUEGRASS/FINE FESCUE: SHADE MIXTURE: FOR USE IN AREAS WITH SHADE IN BLUEGRASS LAWNS. FOR ESTABLISHMENT IN HIGH QUALITY, INTENSIVELY MANAGED TURF AREA. MIXTURE INCLUDES; CERTIFIED KENTUCKY BLUEGRASS CULTIVARS 30 TO 40 PERCENT AND CERTIFIED FINE FESCUE AND 60 TO 70 PERCENT. SEEDING RATE: 1Y2 TO 3 POUNDS PER 1000 SQUARE FEET.

NOTE: TURFGRASS VARIETIES SHOULD BE SELECTED FROM THOSE LISTED IN THE MOST CURRENT UNIVERSITY OF MARYLAND PUBLICATION, AGRONOMY MEMO #77, "TURFGRASS CULTIVAR RECOMMENDATIONS FOR MARYLAND"

C. IDEAL TIMES OF SEEDING

WESTERN MARYLAND: MARCH 15 TO JUNE 1, AUGUST 1 TO OCTOBER 1 (HARDINESS ZONES: 5B, 6A)

CENTRAL MARYLAND: MARCH 1 TO MAY 15, AUGUST 15 TO OCTOBER 15 (HARDINESS ZONE: 6B)

SOUTHERN MARYLAND, EASTERN SHORE: MARCH 1 TO MAY 15, AUGUST 15 TO OCTOBER 15 (HARDINESS ZONES: 7A, 7B)

D. TILL AREAS TO RECEIVE SEED BY DISKING OR OTHER APPROVED METHODS TO A DEPTH OF 2 TO 4 INCHES, LEVEL AND RAKE THE AREAS TO PREPARE A PROPER SEEDBED. REMOVE STONES AND DEBRIS OVER 1Y2 INCHES IN DIAMETER. THE RESULTING SEEDBED MUST BE IN SUCH CONDITION THAT FUTURE MOWING OF GRASSES WILL POSE NO DIFFICULTY.

E. IF SOIL MOISTURE IS DEFICIENT, SUPPLY NEW SEEDINGS WITH ADEQUATE WATER FOR PLANT GROWTH (Y2 TO 1 INCH EVERY 3 TO 4 DAYS DEPENDING ON SOIL TEXTURE) UNTIL THEY ARE FIRMLY ESTABLISHED. THIS IS ESPECIALLY TRUE WHEN SEEDINGS ARE MADE LATE IN THE PLANTING SEASON, IN ABNORMALLY DRY OR HOT SEASONS, OR ON ADVERSE SITES.

Permanent Seeding Summary

Hardiness Zone (from Figure B.3): 6b Seed Mixture (from Table B.3): mix 9					Fertilizer Rate (10-20-20)			Lime Rate
No.	Species	Application Rate (lb/ac)	Seeding Dates	Seeding Depths	N	P_20_5	K_20	
9	Tall Fescue (Lollium arundinaceum) Kentucky Bluegrass (Poa pratensis) Perennial Ryegrass (Lolium perenne)	60 40 20	3/1-5/15 8/15-10/15	1/4-1/2 in	45 lb/ac (1.0 lb/ 1000 sf)	90 lb/ac (2 lb/ 1000 sf)	90 lb/ac (2 lb/ 1000 sf)	2 tons/ac (90lb/ 1000 sf)

* Tall Fescue (Lollium arundinaceum) Formerly Festuca Arundinacea

B. SOD: TO PROVIDE QUICK COVER ON DISTURBED AREAS (2:1 GRADE OR FLATTER).

1. GENERAL SPECIFICATIONS

A. CLASS OF TURFGRASS SOD MUST BE MARYLAND STATE CERTIFIED. SOD LABELS MUST BE MADE AVAILABLE TO THE JOB FOREMAN AND INSPECTOR.

B. SOD MUST BE MACHINE CUT AT A UNIFORM SOIL THICKNESS OF 3/4 INCH, PLUS OR MINUS Y4 INCH, AT THE TIME OF CUTTING. MEASUREMENT FOR THICKNESS MUST EXCLUDE TOP GROWTH AND THATCH. BROKEN PADS AND TORN OR UNEVEN ENDS WILL NOT BE ACCEPTABLE.

C. STANDARD SIZE SECTIONS OF SOD MUST BE STRONG ENOUGH TO SUPPORT THEIR OWN WEIGHT AND RETAIN THEIR SIZE AND SHAPE WHEN SUSPENDED VERTICALLY WITH A FIRM GRASP ON THE UPPER 10 PERCENT OF THE SECTION.

D. SOD MUST NOT BE HARVESTED OR TRANSPLANTED WHEN MOISTURE CONTENT (EXCESSIVELY DRY OR WET) MAY ADVERSELY AFFECT ITS SURVIVAL.

E. SOD MUST BE HARVESTED, DELIVERED, AND INSTALLED WITHIN A PERIOD OF 36 HOURS. SOD NOT TRANSPLANTED WITHIN THIS PERIOD MUST BE APPROVED BY AN AGRONOMIST OR SOIL SCIENTIST PRIOR TO ITS INSTALLATION.

2. SOD INSTALLATION

A. DURING PERIODS OF EXCESSIVELY HIGH TEMPERATURE OR IN AREAS HAVING DRY SUBSOIL, LIGHTLY IRRIGATE THE SUBSOIL IMMEDIATELY PRIOR TO LAYING THE SOD.

B. LAY THE FIRST ROW OF SOD IN A STRAIGHT LINE WITH SUBSEQUENT ROWS PLACED PARALLEL TO IT AND TIGHTLY WEDGED AGAINST EACH OTHER. STAGGER LATERAL JOINTS TO PROMOTE MORE UNIFORM GROWTH AND STRENGTH. ENSURE THAT SOD IS NOT STRETCHED OR OVERLAPPED AND THAT ALL JOINTS ARE BUTTED TIGHT IN ORDER TO PREVENT VOIDS WHICH WOULD CAUSE AIR DRYING OF THE ROOTS.

C. WHEREVER POSSIBLE, LAY SOD WITH THE LONG EDGES PARALLEL TO THE CONTOUR AND WITH STAGGERING JOINTS. ROLL AND TAMP, PEG OR OTHERWISE SECURE THE SOD TO PREVENT SLIPPAGE ON SLOPES. ENSURE SOLID CONTACT EXISTS BETWEEN SOD ROOTS AND THE UNDERLYING SOIL SURFACE.

D. WATER THE SOD IMMEDIATELY FOLLOWING ROLLING AND TAMPING UNTIL THE UNDERSIDE OF THE NEW SOD PAD AND SOIL SURFACE BELOW THE SOD ARE THOROUGHLY WET. COMPLETE THE OPERATIONS OF LAYING, TAMPING AND IRRIGATING FOR ANY PIECE OF SOD WITHIN EIGHT HOURS.

3. SOD MAINTENANCE

A. IN THE ABSENCE OF ADEQUATE RAINFALL, WATER DAILY DURING THE FIRST WEEK OR AS OFTEN AND SUFFICIENTLY AS NECESSARY TO MAINTAIN MOIST SOIL TO A DEPTH OF 4 INCHES. WATER SOD DURING THE HEAT OF THE DAY TO PREVENT WILTING.

B. AFTER THE FIRST WEEK, SOD WATERING IS REQUIRED AS NECESSARY TO MAINTAIN ADEQUATE MOISTURE CONTENT.

C. DO NOT MOW UNTIL THE SOD IS FIRMLY ROOTED. NO MORE THAN 1/3 OF THE GRASS LEAF MUST BE REMOVED BY THE INITIAL CUTTING OR SUBSEQUENT CUTTINGS. MAINTAIN A GRASS HEIGHT OF AT LEAST 3 INCHES UNLESS OTHERWISE SPECIFIED.

STANDARDS AND SPECIFICATIONS FOR SOIL STABILIZATION MATTING

1. THE SOIL STABILIZATION MATTING THAT IS USED MUST WITHSTAND THE FLOW VELOCITIES AND SHEAR STRESSES DETERMINED FOR THE AREA. DESIGNATE ON THE PLAN THE TYPE OF SOIL STABILIZATION MATTING USING THE STANDARD SYMBOL AND INCLUDE THE CALCULATED SHEAR STRESS FOR THE RESPECTIVE TREATMENT AREA.

2. MATTING IS REQUIRED ON PERMANENT CHANNELS WHERE THE RUNOFF VELOCITY EXCEEDS TWO AND HALF FEET PER SECOND (2.5 FPS) OR THE SHEAR STRESS EXCEEDS TWO POUNDS PER SQUARE FOOT (2 LBS/FT2). ON TEMPORARY CHANNELS DISCHARGING TO A SEDIMENT TRAPPING PRACTICE, PROVIDE MATTING WHERE THE RUNOFF VELOCITY EXCEEDS FOUR FEET PER SECOND (4 FPS).

3. TEMPORARY SOIL STABILIZATION MATTING IS MADE WITH DEGRADABLE (LASTS 6 MONTHS MINIMUM), NATURAL, OR MANMADE FIBERS OF UNIFORM THICKNESS AND DISTRIBUTION OF FIBERS THROUGHOUT AND IS SMOLDER RESISTANT. THE MAXIMUM PERMISSIBLE VELOCITY FOR TEMPORARY MATTING IS 6 FEET PER SECOND.

4. PERMANENT SOIL STABILIZATION MATTING IS AN OPEN WEAVE, SYNTHETIC MATERIAL CONSISTING OF NON–DEGRADABLE FIBERS OR ELEMENTS OF UNIFORM THICKNESS AND DISTRIBUTION OF WEAVE THROUGHOUT. THE MAXIMUM PERMISSIBLE VELOCITY FOR PERMANENT MATTING IS 8.5 FEET PER SECOND.

5. CALCULATE CHANNEL VELOCITY AND SHEAR STRESS USING THE FOLLOWING PROCEDURE:

SHEAR STRESS (T) IS A MEASURE OF THE FORCE OF MOVING WATER AGAINST THE SUBSTRATE AND IS CALCULATED AS:

$$\tau = \gamma * R * S_w$$

WHERE:

T = SHEAR STRESS (LB/FT2)
Γ = WEIGHT DENSITY OF WATER (62.4 LB/FT3)
R = AVERAGE WATER DEPTH (HYDRAULIC RADIUS) (FT)
= WATER SURFACE SLOPE (FT/FT)

VELOCITY (V) MEASURES THE RATE OF FLOW THROUGH A DEFINED AREA AND IS CALCULATED AS:

$$v = \frac{1.486 R^{2/3} s^{1/2}}{n}$$

WHERE:

V = VELOCITY (FT/SEC)
N = MANNING'S ROUGHNESS COEFFICIENT
R = HYDRAULIC RADIUS (FT)
S = CHANNEL SLOPE (FT/FT)

6. USE TABLE B.7 TO ASSIST IN SELECTING THE APPROPRIATE SOIL STABILIZATION MATTING FOR SLOPE APPLICATIONS BASED ON THE SLOPE, THE SLOPE LENGTH, AND THE SOIL–ERODIBILITY K FACTOR.

STANDARDS AND SPECIFICATIONS FOR HEAVY USE AREA PROTECTION

1. A MINIMUM 4–INCH BASE COURSE OF CRUSHED STONE OR OTHER SUITABLE MATERIALS INCLUDING WOOD CHIPS OVER NONWOVEN GEOTEXTILE SHOULD BE PROVIDED AS SPECIFIED IN SECTION H–1 MATERIALS.

2. THE STABILIZING MATERIAL SHOULD BE SELECTED BASED ON THE INTENDED USE, DESIRED MAINTENANCE FREQUENCY, AND RUNOFF CONTROL.

3. THE TRANSPORT OF SEDIMENTS, NUTRIENTS, OILS, CHEMICALS, PARTICULATE MATTER ASSOCIATED WITH VEHICULAR TRAFFIC AND EQUIPMENT, AND MATERIAL STORAGE NEEDS TO BE CONSIDERED IN THE SELECTION OF MATERIAL. ADDITIONAL CONTROL MEASURES MAY BE NECESSARY TO CONTROL SOME OF THESE POTENTIAL POLLUTANTS.

4. SURFACE EROSION CAN BE A PROBLEM ON LARGE HEAVY USE AREAS. IN THESE SITUATIONS, MEASURES TO REDUCE THE FLOW LENGTH OF RUNOFF OR EROSIVE VELOCITIES NEED TO BE CONSIDERED.

MAINTENANCE – THE HEAVY USE AREAS MUST BE MAINTAINED IN A CONDITION THAT MINIMIZES EROSION. THIS MAY REQUIRE ADDING SUITABLE MATERIAL, AS SPECIFIED ON THE APPROVED PLANS, TO MAINTAIN A CLEAN SURFACE.

STANDARDS AND SPECIFICATIONS FOR STOCKPILE AREA

1. THE STOCKPILE LOCATION AND ALL RELATED SEDIMENT CONTROL PRACTICES MUST BE CLEARLY INDICATED ON THE EROSION AND SEDIMENT CONTROL PLAN.

2. THE FOOTPRINT OF THE STOCKPILE MUST BE SIZED TO ACCOMMODATE THE ANTICIPATED VOLUME OF MATERIAL AND BASED ON A SIDE SLOPE RATIO NO STEEPER THAN 2:1. BENCHING MUST BE PROVIDED IN ACCORDANCE WITH STANDARD B–3 LAND GRADING.

3. RUNOFF FROM THE STOCKPILE AREA MUST DRAIN TO A SUITABLE SEDIMENT CONTROL PRACTICE.

4. ACCESS TO THE STOCKPILE AREA SHOULD BE FROM THE UPGRADE SIDE.

5. CLEAR WATER RUNOFF INTO THE STOCKPILE AREA MUST BE MINIMIZED BY USE OF A DIVERSION DEVICE SUCH AS AN EARTH DIKE, TEMPORARY SWALE OR DIVERSION FENCE. PROVISIONS MUST BE MADE FOR DISCHARGING CONCENTRATED FLOW IN A NON–EROSIVE MANNER.

6. WHERE RUNOFF CONCENTRATES ALONG THE TOE OF THE STOCKPILE FILL, AN APPROPRIATE EROSION/SEDIMENT CONTROL PRACTICE MUST BE USED TO INTERCEPT THE DISCHARGE.

7. STOCKPILES MUST BE STABILIZED IN ACCORDANCE WITH THE 3/7 DAY STABILIZATION REQUIREMENT AS WELL AS STANDARD B–4–1 INCREMENTAL STABILIZATION AND STANDARD B–4–4 TEMPORARY STABILIZATION.

8. IF THE STOCKPILE IS LOCATED ON AN IMPERVIOUS SURFACE, A LINER MAY BE PROVIDED BELOW THE STOCKPILE TO FACILITATE CLEANUP. STOCKPILES CONTAINING CONTAMINATED MATERIAL MUST BE COVERED WITH IMPERMEABLE SHEETING.

MAINTENANCE – THE STOCKPILE AREA MUST CONTINUOUSLY MEET THE REQUIREMENTS FOR ADEQUATE VEGETATIVE ESTABLISHMENT IN ACCORDANCE WITH SECTION B–4 VEGETATIVE STABILIZATION. SIDE SLOPES MUST BE MAINTAINED AT NO STEEPER THAN A 2:1 RATIO. THE STOCKPILE AREA MUST BE KEPT FREE OF EROSION. IF THE VERTICAL HEIGHT OF A STOCKPILE EXCEEDS 20 FEET FOR 2:1 SLOPES, 30 FEET FOR 3:1 SLOPES, OR 40 FEET FOR 4:1 SLOPES, BENCHING MUST BE PROVIDED IN ACCORDANCE WITH SECTION B–3 LAND GRADING.

SEQUENCE OF CONSTRUCTION:

SEQUENCE OF CONSTRUCTION

THE FEATURES ON THESE DRAWINGS WERE CONSTRUCTED IN ACCORDANCE TO THE SEQUENCE PRESENTED BELOW.

I. SITE PREPARATION AND EROSION AND SEDIMENT CONTROLS:

1. THE CONTRACTOR SHALL NOTIFY THE WATER MANAGEMENT ADMINISTRATION (WMA) AT (410) 537–3510 SEVEN (7) DAYS PRIOR TO BEGINNING CONSTRUCTION AND ARRANGE FOR A PRE–CONSTRUCTION MEETING.

2. THE LIMITS OF DISTURBANCE MUST BE FIELD DETERMINED PRIOR TO CLEARING, INSTALLATION OF SEDIMENT CONTROL MEASURES, CONSTRUCTION OR OTHER LAND DISTURBING ACTIVITIES.

3. SITE CONDITION SURVEY SHALL BE CONDUCTED WITH ENGINEER. IN ALL CASES, THE CONTRACTOR IS RESPONSIBLE FOR PRESERVING VEGETATION AND MINIMIZING VEGETATION DISTURBANCES.

4. THE CONTRACTOR SHALL CLEAR, GRUB, AND REMOVAL ALL TREES, STUMPS, BRUSH AND OTHER MATERIAL, AS NECESSARY, WITHIN THE LIMITS OF DISTURBANCE TO PERFORM THE SHALLOW SOIL EXCAVATION NECESSARY FOR EROSION AND SEDIMENT CONTROL INSTALLATION.

5. THE CONTRACTOR SHALL INSTALL SILT FENCE, AND SUPPLEMENTAL EROSION AND SEDIMENT CONTROLS AS SHOWN ON THE PLANS. THESE CONTROLS ARE TO BE INSTALLED IN CONJUNCTION WITH CLEARING ACTIVITIES AND NOT UPON COMPLETION OF CLEARING AND GRUBBING ACTIVITIES. THE CONTRACTOR SHALL INSTALL STABILIZED CONSTRUCTION ENTRANCES WITH MOUNTABLE BERMS.

6. CONTRACTOR SHALL UPGRADE EXISTING ACCESS ROADS FOR REMEDIATION ACTIVITIES, AS NECESSARY. THE CONTRACTOR SHALL MAKE EVERY EFFORT TO COMPLETE THE REMEDIATION IN A MANNER THAT PRODUCES MINIMAL DISTURBANCE.

7. THE CONTRACTOR SHALL ESTABLISH DECONTAMINATION AND DUST CONTROL PROCEDURES. THESE MEASURES WILL BE IMPLEMENTED TO PREVENT MIGRATION OF POTENTIALLY IMPACTED MATERIAL FROM THE EXCAVATION.

8. THE CONTRACTOR SHALL INSTALL OTHER CONTROLS, AS NECESSARY, TO PREVENT DISCHARGE OF SEDIMENT FROM THE EXCAVATION AREA.

II. EXCAVATION/EARTHWORK

1. THE CONTRACTOR SHALL COVER TEMPORARY STOCKPILES AND DISTURBED AREAS WITH TARPS OR PLASTIC WHEN NECESSARY. OVERLAPPING OF TARPS OR PLASTIC SHALL BE COMPLETED IN A MANNER THAT PREVENTS RUNOFF FROM CONTACTING SOIL. CONTRACTOR SHALL SECURE TEMPORARY COVERS AS REQUIRED TO PREVENT UNCOVERING DURING STORMS OR UNDER WINDY CONDITIONS. CLEAN FILL MATERIAL MAY BE STOCKPILED ON–SITE AS NECESSARY. POSSIBLE STOCKPILE/STAGING AREAS ARE DEPICTED ON THE SITE PLANS. IMPACTED MATERIAL WILL NOT BE STOCKPILED ON–SITE.

2. THE CONTRACTOR SHALL LOAD TRUCKS IN THE APPROVED AREA AND IN A MANNER THAT ELIMINATES THE SPREADING OF CONTAMINATION. THE WASTE MATERIAL SHALL BE DISPOSED OFF–SITE AND AT APPROPRIATE, LICENSED FACILITY.

3. CERTIFIED CLEAN FILL SHALL BE IMPORTED AND INSTALLED IN LIFTS NOT TO EXCEED 12 INCH COMPACTED LIFTS WITH THE EXCEPTION OF TOPSOIL WHICH WILL BE PLACED LOOSE. ALL DISTURBED GRASSY AREAS ARE TO BE BACKFILLED AND GRADED WITH TOPSOIL. TOPSOIL TO BE PLACED IN A MINIMUM 6 INCH LAYER AND PLACED OVER THE EXCAVATION AREA TO SUPPORT HEALTHY VEGETATION , TOPSOIL WILL NOT CONTAIN SUBSTANCES WHICH MAY BE TOXIC TO HUMANS AND PLANTS.

III. EXCAVATION DEWATERING

1. ALTHOUGH NOT ANTICIPATED, IN THE EVENT INCLEMENT WEATHER RESULTS IN THE COLLECTION OF STORMWATER RUN–ON WITHIN THE EXCAVATION THE CONTRACTOR SHALL CONDUCT SOIL CONDITIONING INCLUDING ONE OR A COMBINATION OF THE FOLLOWING TECHNIQUES: (1) MIXING OF DRY SOILS FROM THE EXCAVATION SIDEWALL WITH SATURATED SOILS, (2) IN–HOLE MIXING OF PORTLAND CEMENT, (3) STOCKPILING SOILS WITHIN THE EXCAVATION TO ALLOW SOILS TO DRAIN, AND/OR (4) MECHANICAL DEWATERING OF THE EXCAVATION AND CONTAINERIZING THE EXCAVATION WATER.

2. EXCAVATION WATER THAT HAS BEEN IN CONTACT WITH CHLORDANE IMPACTED SOILS ABOVE THE SCL WILL BE TEMPORARILY CONTAINERIZED, LABELED, AND SAMPLED. IF THE RESULTS OF THE EXCAVATION WATER SAMPLES INDICATE THAT CONSTITUENTS WITHIN THE EXCAVATION WATER ARE BELOW APPLICABLE SCREENING CRITERIA, THE CONTRACTOR SHALL PRETREAT CONTAINERIZED WATER WITH A FILTER BAG PRIOR TO DISCHARGE TO THE GROUND SURFACE. IF ANALYTICAL DATA INDICATE EXCAVATION WATER CONTAINS CONTAMINANTS ABOVE APPLICABLE SCREENING CRITERIA, THEN TWO OPTIONS FOR DISPOSAL ARE POSSIBLE: OFF–SITE DISPOSAL OR ON–SITE TREATMENT AND DISCHARGE.

3. WATER THAT IS COLLECTED WITHIN THE EXCAVATION BUT HAS NOT BEEN IN CONTACT WITH SOIL WITH CHLORDANE IMPACTS ABOVE THE SCL WILL BE REMOVED FROM THE EXCAVATION BY PUMPING. THE CONTRACTOR SHALL PRE–TREAT WATER FOR SEDIMENT LOAD WITH A FILTER BAG (REFER TO DETAIL 4 ON DRAWING ES–4) AND THEN DISCHARGE TO THE DRAINAGE SWALE LOCATED IMMEDIATELY EAST OF THE SITE.

IV. SITE RESTORATION

1. COMPLETE GRADING AND UPGRADE SOIL EROSION MEASURES AS REQUIRED.

2. APPLY SEED AND EROSION MAT/MULCH AS SPECIFIED AT ALL DISTURBED AREAS.

3. REMOVE ALL TEMPORARY EROSION AND SEDIMENT CONTROL FEATURES UPON SITE STABILIZATION AND THE APPROVAL OF THE MDE INSPECTOR.

THIS BAR REPRESENTS ONE INCH ON THE ORIGINAL DRAWING: USE TO VERIFY FIGURE REPRODUCTION SCALE

No.	Date	Revisions	By	Ckd
1	7/2013	UPDATE SITE FEATURES AND NOTES	JAM	AD

THIS DRAWING IS THE PROPERTY OF THE ARCADIS ENTITY IDENTIFIED IN THE TITLE BLOCK AND MAY NOT BE REUSED OR ALTERED IN WHOLE OR IN PART WITHOUT THE EXPRESS WRITTEN PERMISSION OF SAME.

Professional Engineer's Name: DAVID ANTHONY CABALLERO
Professional Engineer's No.: 22777
State: MD | Date Signed: | Project Mgr.: TC
Designed by: RK | Drawn by: MW/JM | Checked by: DC

ARCADIS
ARCADIS U.S., INC.

FGGM13 FORMER PESTICIDE SHOP, BUILDING 6621 • FORT MEADE, MARYLAND
REMEDIAL DESIGN EXCAVATION AND SITE GRADING

EROSION AND SEDIMENT CONTROL NOTES AND TABLES

ARCADIS Project No. GP09MEAD.PEST.HG001
Date AUGUST, 2013
ARCADIS
10 FRIENDS LANE
NEWTOWN, PA 18940
TEL. 267.685.1800

ES-2

NOTES:

1. SEE DRAWINGS ES-1 AND ES-2 FOR STANDARD EROSION AND SEDIMENT CONTROL NOTES, GENERAL NOTES, SEQUENCE OF CONSTRUCTION, AND LEGEND.
2. EROSION AND SEDIMENT CONTROLS SHALL BE INSTALLED IN ACCORDANCE WITH THIS EROSION AND SEDIMENT CONTROL PLAN; FEDERAL, STATE, AND LOCAL REGULATIONS, AND AS DIRECTED BY THE ENGINEER.
3. NO SOIL DISTURBANCE OR VEGETATION CLEARING SHALL BE CONDUCTED UNTIL EROSION AND SEDIMENT CONTROLS ARE INSTALLED.
4. EROSION AND SEDIMENT CONTROL WILL BE STRICTLY ENFORCED.
5. CLEAN FILL MATERIAL MAY BE STOCKPILED ON-SITE AS NECESSARY. PROPOSED STOCKPILE/STAGING AREAS ARE DEPICTED HEREON. IMPACTED MATERIAL WILL NOT BE STOCKPILED ON-SITE.
6. ALTHOUGH NOT ANTICIPATED, IN THE EVENT INCLEMENT WEATHER RESULTS IN THE COLLECTION OF STORMWATER RUN-ON WITHIN THE EXCAVATION THE CONTRACTOR SHALL CONDUCT SOIL CONDITIONING INCLUDING ONE OR A COMBINATION OF THE FOLLOWING TECHNIQUES: (1) MIXING OF DRY SOILS FROM THE EXCAVATION SIDEWALL WITH SATURATED SOILS, (2) IN-HOLE MIXING OF PORTLAND CEMENT, (3) STOCKPILING SOILS WITHIN THE EXCAVATION TO ALLOW SOILS TO DRAIN, AND/OR (4) MECHANICAL DEWATERING OF THE EXCAVATION AND CONTAINERIZING THE EXCAVATION WATER.
7. EXCAVATION WATER THAT HAS BEEN IN CONTACT WITH CHLORDANE IMPACTED SOILS ABOVE THE SCL WILL BE TEMPORARILY CONTAINERIZED, LABELED, AND SAMPLED. IF THE RESULTS OF THE EXCAVATION WATER SAMPLES INDICATE THAT CONSTITUENTS WITHIN THE EXCAVATION WATER ARE BELOW APPLICABLE SCREENING CRITERIA, THE CONTRACTOR SHALL PRETREAT CONTAINERIZED WATER WITH A FILTER BAG (REFER TO DETAIL 4 ON DRAWING ES-4) PRIOR TO DISCHARGE TO THE GROUND SURFACE. IF ANALYTICAL DATA INDICATE EXCAVATION WATER CONTAINS CONTAMINANTS ABOVE APPLICABLE SCREENING CRITERIA, THEN TWO OPTIONS FOR DISPOSAL ARE POSSIBLE: OFF-SITE DISPOSAL OR ON-SITE TREATMENT AND DISCHARGE.
8. WATER THAT IS COLLECTED WITHIN THE EXCAVATION BUT HAS NOT BEEN IN CONTACT WITH SOIL WITH CHLORDANE IMPACTS ABOVE THE SCL WILL BE REMOVED FROM THE EXCAVATION BY PUMPING. THE CONTRACTOR SHALL PRE-TREAT WATER FOR SEDIMENT LOAD WITH A FILTER BAG (REFER TO DETAIL 4 ON DRAWING ES-4) AND THEN DISCHARGE TO THE DRAINAGE SWALE LOCATED IMMEDIATELY EAST OF THE SITE.

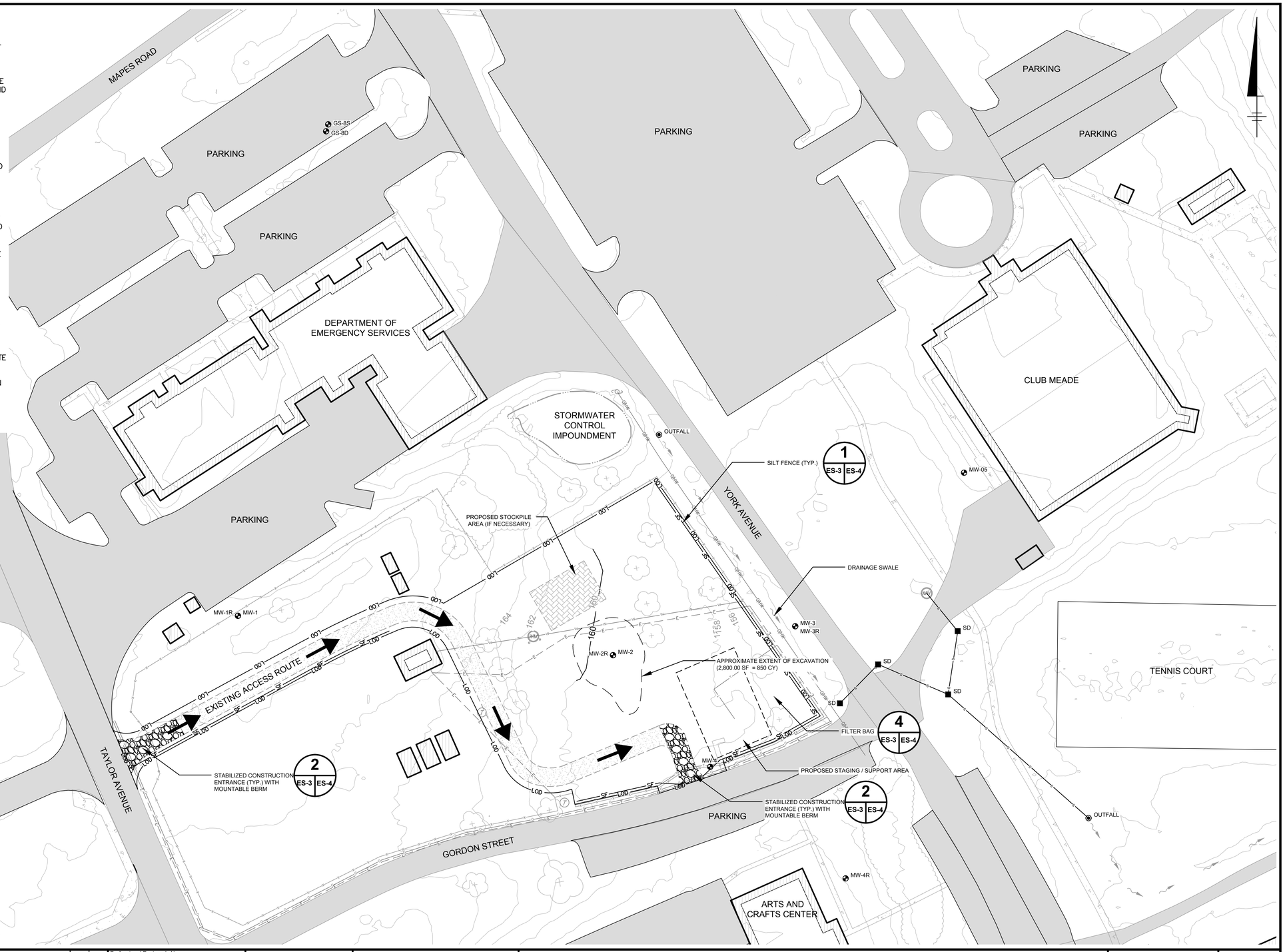

CITY: NEWTOWN, PA / CRANBURY-NJ DIV/GROUP: ENVCAD LD: M. WASILEWSKI/JMEYER PIC: T.TALELE PM: T.LLEWLLYN TM: W.KAHL LYR:ON=*;OFF=*REF*
G:\ENVCAD\CRANBURY\RETURN-TO\Newtown-PA\GP09MEAD\PEST\HG001\CONTRACT\GP09MEADG04.dwg LAYOUT: ES-3 SAVED: 11/7/2013 1:18 PM ACADVER: 18.1S (LMS TECH) PAGESETUP: ---- PLOTSTYLETABLE: ---- PLOTTED: 11/13/2013 10:49 AM BY: MEYER, JULIE

PROJECTNAME:
XREFS: 09MEADX00 GP09MEADX01 GP09MEADX02
IMAGES:

0 40' 80'
GRAPHIC SCALE

THIS BAR REPRESENTS ONE INCH ON THE ORIGINAL DRAWING: USE TO VERIFY FIGURE REPRODUCTION SCALE

No.	Date	Revisions	By	Ckd

THIS DRAWING IS THE PROPERTY OF THE ARCADIS ENTITY IDENTIFIED IN THE TITLE BLOCK AND MAY NOT BE REUSED OR ALTERED IN WHOLE OR IN PART WITHOUT THE EXPRESS WRITTEN PERMISSION OF SAME.

Professional Engineer's Name: DAVID ANTHONY CABALLERO
Professional Engineer's No.: 22777
State: MD | Date Signed: | Project Mgr.: TC
Designed by: RK | Drawn by: MW/JM | Checked by: DC

ARCADIS
ARCADIS U.S., INC.

FGGM13 FORMER PESTICIDE SHOP, BUILDING 6621 ● FORT MEADE, MARYLAND

EROSION AND SEDIMENT CONTROL PLAN

ARCADIS Project No. GP09MEAD.PEST.HG001
Date APRIL, 2013
ARCADIS
10 FRIENDS LANE
NEWTOWN, PA 18940
TEL. 267.685.1800

ES-3

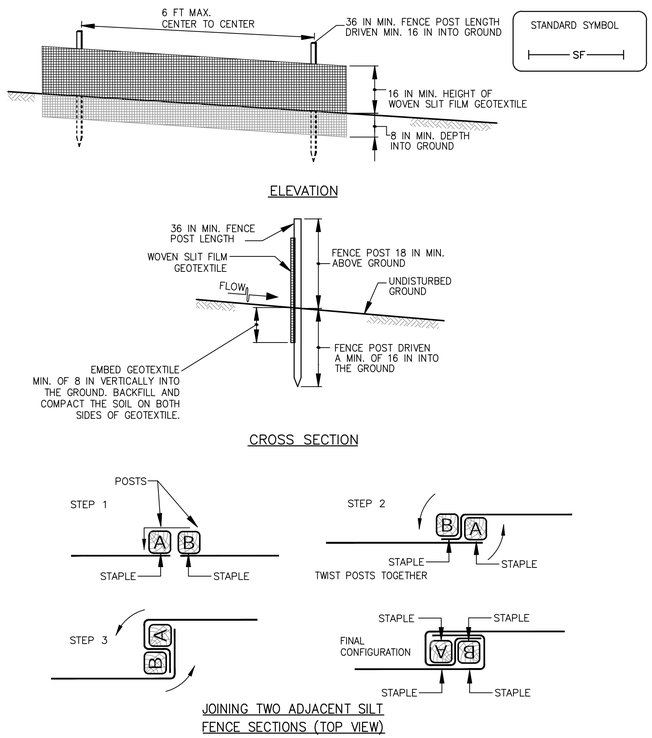

CONSTRUCTION SPECIFICATIONS

1. USE WOOD POSTS 1¾ X 1¾ ± 1/16 INCH (MINIMUM) SQUARE CUT OF SOUND QUALITY HARDWOOD. AS AN ALTERNATIVE TO WOODEN POST USE STANDARD "T" OR "U" SECTION STEEL POSTS WEIGHING NOT LESS THAN 1 POUND PER LINEAR FOOT.
2. USE 36 INCH MINIMUM POSTS DRIVEN 16 INCH MINIMUM INTO GROUND NO MORE THAN 6 FEET APART.
3. USE WOVEN SLIT FILM GEOTEXTILE AS SPECIFIED IN SECTION H-1 MATERIALS AND FASTEN GEOTEXTILE SECURELY TO UPSLOPE SIDE OF FENCE POSTS WITH WIRE TIES OR STAPLES AT TOP AND MID-SECTION.
4. PROVIDE MANUFACTURER CERTIFICATION TO THE AUTHORIZED REPRESENTATIVE OF THE INSPECTION/ENFORCEMENT AUTHORITY SHOWING THAT THE GEOTEXTILE USED MEETS THE REQUIREMENTS IN SECTION H-1 MATERIALS.
5. EMBED GEOTEXTILE A MINIMUM OF 8 INCHES VERTICALLY INTO THE GROUND. BACKFILL AND COMPACT THE SOIL ON BOTH SIDES OF FABRIC.
6. WHERE TWO SECTIONS OF GEOTEXTILE ADJOIN: OVERLAP, TWIST, AND STAPLE TO POST IN ACCORDANCE WITH THIS DETAIL.
7. EXTEND BOTH ENDS OF THE SILT FENCE A MINIMUM OF FIVE HORIZONTAL FEET UPSLOPE AT 45 DEGREES TO THE MAIN FENCE ALIGNMENT TO PREVENT RUNOFF FROM GOING AROUND THE ENDS OF THE SILT FENCE.
8. REMOVE ACCUMULATED SEDIMENT AND DEBRIS WHEN BULGES DEVELOP IN SILT FENCE OR WHEN SEDIMENT REACHES 25% OF FENCE HEIGHT. REPLACE GEOTEXTILE IF TORN. IF UNDERMINING OCCURS, REINSTALL FENCE.

1 / ES-3 ES-4 SILT FENCE

N.T.S.

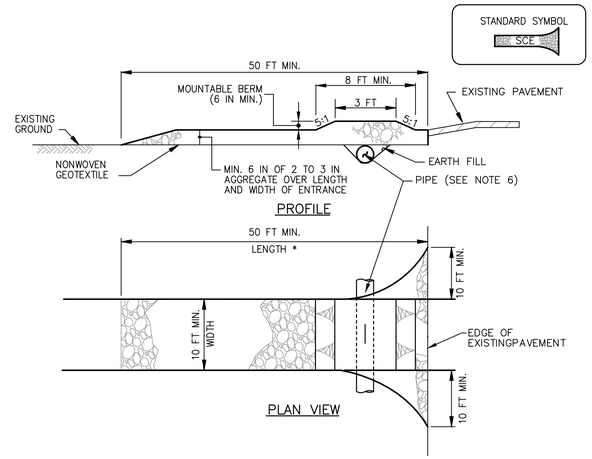

CONSTRUCTION SPECIFICATIONS

1. PLACE STABILIZED CONSTRUCTION ENTRANCE IN ACCORDANCE WITH THE APPROVED PLAN. VEHICLES MUST TRAVEL OVER THE ENTIRE LENGTH OF THE SCE. USE MINIMUM LENGTH OF 50 FEET (*30 FEET FOR SINGLE RESIDENCE LOT). USE MINIMUM WIDTH OF 10 FEET. FLARE SCE 10 FEET MINIMUM AT THE EXISTING ROAD TO PROVIDE A TURNING RADIUS.
2. PIPE ALL SURFACE WATER FLOWING TO OR DIVERTED TOWARD THE SCE UNDER THE ENTRANCE, MAINTAINING POSITIVE DRAINAGE. PROTECT PIPE INSTALLED THROUGH THE SCE WITH A MOUNTABLE BERM WITH 5:1 SLOPES AND A MINIMUM OF 12 INCHES OF STONE OVER THE PIPE. PROVIDE PIPE AS SPECIFIED ON APPROVED PLAN. WHEN THE SCE IS LOCATED AT A HIGH SPOT AND HAS NO DRAINAGE TO CONVEY, A PIPE IS NOT NECESSARY. A MOUNTABLE BERM IS REQUIRED WHEN SCE IS NOT LOCATED AT A HIGH SPOT.
3. PREPARE SUBGRADE AND PLACE NONWOVEN GEOTEXTILE, AS SPECIFIED IN SECTION H-1 MATERIALS.
4. PLACE CRUSHED AGGREGATE (2 TO 3 INCHES IN SIZE) OR EQUIVALENT RECYCLED CONCRETE (WITHOUT REBAR) AT LEAST 6 INCHES DEEP OVER THE LENGTH AND WIDTH OF THE SCE.
5. MAINTAIN ENTRANCE IN A CONDITION THAT MINIMIZES TRACKING OF SEDIMENT. ADD STONE OR MAKE OTHER REPAIRS AS CONDITIONS DEMAND TO MAINTAIN CLEAN SURFACE, MOUNTABLE BERM, AND SPECIFIED DIMENSIONS. IMMEDIATELY REMOVE STONE AND/OR SEDIMENT SPILLED, DROPPED, OR TRACKED ONTO ADJACENT ROADWAY BY VACUUMING, SCRAPING, AND/OR SWEEPING. WASHING ROADWAY TO REMOVE MUD TRACKED ONTO PAVEMENT IS NOT ACCEPTABLE UNLESS WASH WATER IS DIRECTED TO AN APPROVED SEDIMENT CONTROL PRACTICE.

2 / ES-3 ES-4 STABILIZED CONSTRUCTION ENTRANCE

N.T.S.

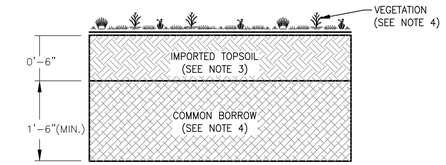

NOTES:

1. CLEAN OVERBURDEN MATERIAL SHALL BE REUSED AS BACKFILL FOR THE EXCAVATION. OVERBURDEN MATERIALS SHALL BE PLACED IN 12-INCH LOOSE LIFTS AND COMPACTED TO AN APPROVED DENSITY AS VISUALLY DETERMINED BY THE ON-SITE ENGINEER THROUGH PROOF-ROLL TESTING. STONE, ROOT MATTER, OR OTHER DELETERIOUS MATERIAL THAT MAY INHIBIT COMPACTION WILL BE SEGREGATED FROM THE SOIL, AS NECESSARY, IN ORDER TO ACHIEVE PROPER COMPACTION. CLEAN OVERBURDEN SOILS SHALL NOT BE PLACED WHEN COVERED IN SNOW, ICE OR FROZEN.
2. IMPORTED COMMON BORROW SHALL CONSIST OF APPROVED MATERIALS SUBSTANTIALLY FREE FROM ORGANIC MATERIALS, LOAM, WOOD DEBRIS, TRASH, ROOTS, BRUSH, GRAVEL, AND OTHER OBJECTIONABLE MATERIALS, WHICH MAY INHIBIT COMPACTION. MATERIALS SHALL NOT BE EXCESSIVELY WET OR SATURATED. THE COMMON BORROW SOILS SHALL BE CLASSIFIED ACCORDING TO UNIFIED SOIL CLASSIFICATION SYSTEM (USCS) AS SM, SC-SM, SC, ML-CL, ML OR CL. COVER SOIL SHALL NOT CONTAIN GRANITE BLOCKS, BROKEN CONCRETE, MASONRY RUBBLE, OR OTHER SIMILAR MATERIALS. IMPORTED COMMON BORROW MATERIALS SHALL BE PLACED IN 12-INCH LOOSE LIFTS AND COMPACTED TO AN APPROVED DENSITY AS VISUALLY DETERMINED BY THE ON-SITE ENGINEER THROUGH PROOF-ROLL TESTING. COMMON BORROW SOILS SHALL NOT BE PLACED SNOW, ICE AND FROZEN SOIL ALSO SHALL NOT BE PERMITTED. IMPORTED FILL SHALL BE OBTAINED FROM THE FT. MEADE SOIL STOCKPILE OR OTHER APPROVED SOURCES.
3. IMPORTED TOPSOIL MATERIAL SHALL ADHERE TO THE REQUIREMENTS SPECIFIED ON SHEET ES-1 AND ES-2.
4. SEED SHALL BE APPLIED TO FINISHED TOPSOIL LAYER TO ESTABLISH VEGETATION. SEEDBED PREPARATION, SEEDING, AND MULCHING SHALL BE IN ACCORDANCE WITH THE SPECIFICATIONS ON SHEET ES-1.

3 / ES-4 ES-4 TYPICAL FINAL GRADING DETAIL

N.T.S.

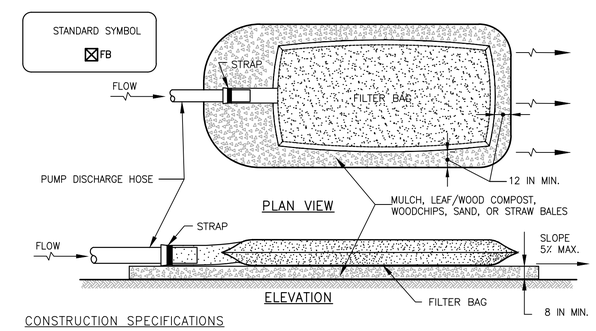

CONSTRUCTION SPECIFICATIONS

1. TIGHTLY SEAL SLEEVE AROUND THE PUMP DISCHARGE HOSE WITH A STRAP OR SIMILAR DEVICE.
2. PLACE FILTER BAG ON SUITABLE BASE (E.G., MULCH, LEAF/WOOD COMPOST, WOODCHIPS, SAND, OR STRAW BALES) LOCATED ON A LEVEL OR 5% MAXIMUM SLOPING SURFACE. DISCHARGE TO A STABILIZED AREA. EXTEND BASE A MINIMUM OF 12 INCHES FROM EDGES OF BAG.
3. CONTROL PUMPING RATE TO PREVENT EXCESSIVE PRESSURE WITHIN THE FILTER BAG IN ACCORDANCE WITH THE MANUFACTURER RECOMMENDATIONS. AS THE BAG FILLS WITH SEDIMENT, REDUCE PUMPING RATE.
4. REMOVE AND PROPERLY DISPOSE OF FILTER BAG UPON COMPLETION OF PUMPING OPERATIONS OR AFTER BAG HAS REACHED CAPACITY, WHICHEVER OCCURS FIRST. SPREAD THE DEWATERED SEDIMENT FROM THE BAG IN AN APPROVED UPLAND AREA AND STABILIZE WITH SEED AND MULCH BY THE END OF THE WORK DAY. RESTORE THE SURFACE AREA BENEATH THE BAG TO ORIGINAL CONDITION UPON REMOVAL OF THE DEVICE.
5. USE NONWOVEN GEOTEXTILE WITH DOUBLE STITCHED SEAMS USING HIGH STRENGTH THREAD. SIZE SLEEVE TO ACCOMMODATE A MAXIMUM 4 INCH DIAMETER PUMP DISCHARGE HOSE. THE BAG MUST BE MANUFACTURED FROM A NONWOVEN GEOTEXTILE THAT MEETS OR EXCEEDS MINIMUM AVERAGE ROLL VALUES (MARV) FOR THE FOLLOWING:

GRAB TENSILE	250 LB	ASTM D-4632
PUNCTURE	150 LB	ASTM D-4833
FLOW RATE	70 GAL/MIN/FT^2	ASTM D-4491
PERMITTIVITY (SEC^{-1})	1.2 SEC^{-1}	ASTM D-4491
UV RESISTANCE	70% STRENGTH @ 500 HOURS	ASTM D-4355
APPARENT OPENING SIZE (AOS)	0.15-0.18 MM	ASTM D-4751
SEAM STRENGTH	90%	ASTM D-4632

6. REPLACE FILTER BAG IF BAG CLOGS OR HAS RIPS, TEARS, OR PUNCTURES. DURING OPERATION KEEP CONNECTION BETWEEN PUMP HOSE AND FILTER BAG WATER TIGHT. REPLACE BEDDING IF IT BECOMES DISPLACED.

4 / ES-3 ES-4 FILTER BAG

N.T.S.

CITY: NEWTOWN, PA / CRANBURY-NJ DIV/GROUP: ENVCAD LD: M. WASILEWSKI/JMEYER PIC: T.TALELE PM: T.LLEWLLYN TM: W.KAHL LYR:ON=*;OFF=REF*
C:\ENVCAD\CRANBURY\RETURN-TO\Newtown-PA\GP09MEAD\PEST\HG001\CONTRACT\GP09MEADN03.dwg LAYOUT: ES-4 SAVED: 8/1/2013 8:40 AM ACADVER: 18.1S (LMS TECH) PAGESETUP: ---- PLOTSTYLETABLE: ---- PLOTTED: 8/1/2013 8:40 AM BY: FATTO, TRACEY
XREFS: IMAGES: PROJECTNAME: ----
09MEADX00

THIS BAR REPRESENTS ONE INCH ON THE ORIGINAL DRAWING: USE TO VERIFY FIGURE REPRODUCTION SCALE

No.	Date	Revisions	By	Ckd
1	7/2013	UPDATE SITE FEATURES AND NOTES	JAM	AD

THIS DRAWING IS THE PROPERTY OF THE ARCADIS ENTITY IDENTIFIED IN THE TITLE BLOCK AND MAY NOT BE REUSED OR ALTERED IN WHOLE OR IN PART WITHOUT THE EXPRESS WRITTEN PERMISSION OF SAME.

Professional Engineer's Name: DAVID ANTHONY CABALLERO
Professional Engineer's No.: 22777

State	Date Signed	Project Mgr.
MD		TC
Designed by	Drawn by	Checked by
RK	MW/JM	DC

ARCADIS
ARCADIS U.S., INC.

FGGM13 FORMER PESTICIDE SHOP, BUILDING 6621 • FORT MEADE, MARYLAND
REMEDIAL DESIGN EXCAVATION AND SITE GRADING

EROSION AND SEDIMENT CONTROL DETAILS

ARCADIS Project No. GP09MEAD.PEST.HG001
Date AUGUST, 2013

ARCADIS
10 FRIENDS LANE
NEWTOWN, PA 18940
TEL. 267.685.1800

ES-4

NOTES:

1. SEE DRAWING ES-1 AND ES-2 FOR GENERAL NOTES AND LEGEND.
2. THE CONTRACTOR SHALL INSURE THAT THERE IS NO NET CHANGE TO THE SURFACE AREA OF IMPERVIOUS SURFACES (PRE-CONSTRUCTION VERSUS POST-CONSTRUCTION) AT THE SITE, NOR SHALL THERE BE CHANGES TO THE STORMWATER FLOW CHARACTERISTICS OF THE SITE.
3. THE CONTRACTOR SHALL ACHIEVE THE FINAL GRADES DEPICTED HEREIN AND SHALL PROVIDE A SMOOTH TRANSITION TO THE EXISTING GRADES.
4. SEE DRAWING ES-4 DETAIL 3 FOR INSTALLATION OF FINAL SOIL COVER.
5. COMMON BORROW SHALL BE OBTAINED FROM THE CSL STOCKPILE.
6. TOPSOIL SHALL BE CERTIFIED CLEAN FILL.
7. ALL DISTURBED SURFACES SHALL BE RESTORED IN-KIND AND STABILIZED PRIOR TO REMOVAL OF EROSION AND SEDIMENT CONTROLS.

CITY: NEWTOWN, PA / CRANBURY-NJ DIV/GROUP: ENVCAD LD: M. WASILEWSKI/JMEYER PIC: T.TALELE PM: T.LLEWLLYN TM: W.KAHL LYR:ON=*;OFF=*REF*
C:\ENVCAD\CRANBURY\RETURN-TO\Newtown-PA\GP09MEAD\PEST\HG001\CONTRACT\GP09MEADG05.dwg LAYOUT: ES-5 SAVED: 8/1/2013 10:42 AM ACADVER: 18.1S (LMS TECH) PAGESETUP: ---- PLOTSTYLETABLE: ---- PLOTTED: 8/1/2013 10:42 AM BY: FATTO, TRACEY

XREFS: PROJECTNAME: ---
IMAGES: 09MEADX00 GP09MEADX01 GP09MEADX02

0 40' 80'
GRAPHIC SCALE

THIS BAR REPRESENTS ONE INCH ON THE ORIGINAL DRAWING: USE TO VERIFY FIGURE REPRODUCTION SCALE

No.	Date	Revisions	By	Ckd
1	7/2013	UPDATE SITE FEATURES AND NOTES	JAM	AD

THIS DRAWING IS THE PROPERTY OF THE ARCADIS ENTITY IDENTIFIED IN THE TITLE BLOCK AND MAY NOT BE REUSED OR ALTERED IN WHOLE OR IN PART WITHOUT THE EXPRESS WRITTEN PERMISSION OF SAME.

Professional Engineer's Name
DAVID ANTHONY CABALLERO
Professional Engineer's No.
22777

State	Date Signed	Project Mgr.
MD		TC
Designed by	Drawn by	Checked by
RK	MW/JM	DC

ARCADIS

ARCADIS U.S., INC.

FGGM13 FORMER PESTICIDE SHOP, BUILDING 6621 • FORT MEADE, MARYLAND
REMEDIAL DESIGN EXCAVATION AND SITE GRADING

FINAL GRADING AND RESTORATION

ARCADIS Project No.
GP09MEAD.PEST.HG001

Date
AUGUST, 2013

ARCADIS
10 FRIENDS LANE
NEWTOWN, PA 18940
TEL. 267.685.1800

ES-5

Appendix B

Pre-Excavation Sampling Work Plan, Laboratory Reports (provided on CD) and Field Forms

Round 1 Work Plan

DEPARTMENT OF THE ARMY
US ARMY INSTALLATION MANAGEMENT COMMAND
HEADQUARTERS, UNITED STATES ARMY GARRISON
4551 LLEWELLYN AVENUE, SUITE 5000
FORT GEORGE G. MEADE, MARYLAND 20755-5000

REPLY TO ATTENTION OF:

November 20, 2012

Environmental Division

Mr. John Burchette
NPL/BRAC/Federal Facilities Branch
U.S. Environmental Protection Agency
1650 Arch Street
Philadelphia, PA 19103-2029

Dear Mr. Burchette:

Enclosed please find the November 2012 *Final Pre-excavation Delineation Soil Sampling Work Plan, FGGM-13, Former Pesticide Shop* (Plan) for your review. The Draft Plan was revised based on comments received from the Maryland Department of Environment on November 19, 2012.

This submittal serves as notification of the upcoming work to determine the remedial design boundaries for planned soil excavation in accordance with the approved Record of Decision. Field activities are scheduled to commence November 27, 2012, with an anticipated duration of five days. Copies of the Plan have been furnished to Mick Butler (Fort George G. Meade), Francis Coulters (U.S. Army Environmental Command), Elisabeth Green (Maryland Department of the Environment), and the Fort Meade Restoration Advisory Board.

If you have any questions, please feel free to contact Ms. Denise Tegtmeyer at (301) 677-9559 or me at (301) 677-9365.

Sincerely,

FOR:

Paul V. Fluck, PG, REP
Program Manager, Installation Restoration Program
Directorate of Public Works-Environmental Division

Enclosure

ARCADIS U.S., Inc.
1114 Benfield Boulevard
Suite A
Millersville
Maryland 21108
Tel 410 987 0032
Fax 410 987 4392
www.arcadis-us.com

ENVIRONMENT

Mr. Paul Fluck, P.G., REP
U.S. Army Garrison Fort George G. Meade
Directorate of Public Works, Environmental Division
2212 Chisholm Avenue, Suite 5115
Fort Meade, Maryland 20755-7068

Subject:
Pre-excavation Delineation Soil Sampling Work Plan
The Former Pesticide Shop (FGGM-13)
Fort Meade, Maryland
Contract W91ZLK-05-D-0015—Task Order 0005

Date:
20 November 2012

Contact:
Brian Stempowski

Phone:
410.987.0032

Email:
Brian.stempowski@arcadis-us.com

Our ref:
GP09MEAD.PEST

Dear Mr. Fluck:

This Work Plan provides the methodologies for pre-excavation delineation soil sampling to be conducted within the Former Pesticide Shop (Site) boundaries at Fort George G. Meade (FGGM). The work plan was prepared by ARCADIS U.S., Inc. (ARCADIS) to determine the remedial design boundaries for planned excavation in accordance with the Record of Decision (ROD) (U.S. Army, 2012). The results of the pre-excavation delineation soil sampling will form the basis for the limits of excavation in the upcoming Remedial Design.

All field activities associated with this scope of work will be completed in accordance with procedures established in the site-wide plans developed by ARCADIS for work under the FGGM Performance Based Acquisition, number W91ZK-05-D-0015:

- Waste Management Plan (WMP) for the Performance Based Acquisition at Fort Meade (ARCADIS, 2010a)
- Health and Safety Plan (HASP) for the Performance Based Acquisition at Fort Meade (ARCADIS, 2010b)
- Quality Assurance Project Plan (QAPP) for the Performance Based Acquisition at Fort Meade (ARCADIS, 2011a)

- Sample and Analysis Plan (SAP) for the Performance Based Acquisition at Fort Meade (ARCADIS, 2011b)

Furthermore, all subsurface work presented in this Work Plan will be completed in accordance with Fort Meade Excavation Permit Application Procedures. In addition, all potential boring locations will be inspected for underground utilities, and surface mark-outs painted by a private utility locating subcontractor.

Background

The conclusions of the Human Health Risk Assessment conducted at the Former Pesticide Shop during the Remedial Investigation (RI) (ARCADIS, 2011c) determined that soil concentrations of chlordane and heptachlor epoxide posed unacceptable risk to future construction workers. The selected Remedial Alternative (RA) presented in the ROD (U.S. Army, 2012) is Soil Excavation with Off-site Disposal, Land-use Controls, and Enhanced Reductive Dechlorination with Long-term Monitoring of Groundwater. As stated in the ROD, Preliminary Remediation Goals (PRGs) were calculated for the risk driving constituents of concern (COCs) in soil (chlordane and heptachlor epoxide). Site Cleanup Levels (SCLs) were set equal to these PRGs and drive the vertical and horizontal extent of the excavation limits. The PRGs for chlordane and heptachlor epoxide are 16.21 milligrams per kilogram (mg/kg) and 0.77 mg/kg, respectively. **Figure 1** displays the locations of historical soil borings installed during the numerous RI investigations and identifies sampling locations where chlordane and heptachlor epoxide detections above SCLs were observed.

Direct-push Technology Drilling and Soil Sampling Methodology

Direct-push Technology (DPT) sampling methodology will be utilized to confirm the vertical and horizontal extent of chlordane and heptachlor epoxide present in soil at concentrations above the SCLs. **Figure 2** presents the locations of the proposed eleven DPT borings. The pre-excavation sampling grid is oriented north – south and centered on existing monitoring well MW-2R located adjacent to the known former pesticide shop areas and historic sampling locations with elevated concentrations of the COCs. DPT boring locations will be installed using 20 foot spacing from this monitoring well and other boring locations. Boring locations may be adjusted in the field based upon visual observations of soil samples and site constraints (i.e., utilities, below ground structures, above ground structures).

Soil samples will be segregated and analyzed sequentially in two separate laboratory batches. Soil samples collected from two discrete depth intervals (0-2 feet below ground surface [ft bgs] and 4-6 ft bgs) will be segregated and analyzed as the first laboratory batch. Soil samples collected from 8-10 ft bgs (laboratory batch 2) will be submitted and analysis held pending results of laboratory batch 1. Laboratory batch 2 samples will be released for analysis if SCL exceedances are observed in samples collected from 4-6 ft bgs. **Table 1** specifies the specific analytical parameters proposed at each DPT soil sampling location.

DPT drilling and sampling methodology implemented during the pre-excavation soil sampling investigation is as follows:

- Each soil boring will be installed to a terminal depth of approximately 10 ft bgs using a direct-push drill rig. During direct-push activities, a core sampler with a clear acetate liner will be hydraulically driven into the ground in order to collect soil in 4-foot intervals until the target depth is reached. Borings will be logged continuously to the bottom of each boring for lithology and screened using a photo ionization detector (PID). Soil descriptions will be recorded on standard ARCADIS boring logs.

- At each of the DPT boring locations soil samples will be collected at three pre-determined depth intervals: 0-2, 4-6, and 8-10 ft bgs and analyzed for chlordane and heptachlor epoxide.

- Laboratory batch 1 consists of twenty-three soil samples collected from eleven DPT boring locations at depths of 0-2 and 4-6 ft bgs, and 8-10 ft bgs only in the case of SB-05. In addition to the chlordane and heptachlor epoxide analyses, volatile organic compound (VOC) analysis will also be conducted on the soil samples collected from the three discrete depth intervals at SB05 (**Figure 2**) and included in laboratory batch 1. It is noted that all three discrete samples from SB-05 will be analyzed in batch 1 because it is expected that pesticide impacts may be observed at 8 ft bgs; it was predetermined to evaluate VOCs at this location at all three depths; and, it is possible that no samples will be released for analysis from batch 2.

- Laboratory batch 2 consists of ten soil samples collected from ten DPT boring locations at depths between 8-10 ft bgs.

- Chlordane and heptachlor epoxide soil samples will be analyzed via United States Environmental Protection Agency (USEPA) Method 8081. VOCs soil samples will be analyzed via USEPA Method 8260B. All soil samples collected during the pre-excavation sampling event will be sent to Shealy Laboratories in West Columbia, South Carolina. In accordance with the FGGM QAPP (ARCADIS, 2011a), additional samples, including blind duplicates, matrix spikes, matrix spike duplicates, and equipment blanks will be collected for quality control (QC) analysis at the rate of 1 per 20 field samples. Trip blanks will also be included with any sample cooler containing VOC samples.

Waste Characterization

It is anticipated that approximately 700 tons of soil will be excavated during the Removal Action. Based on that amount of soil, one composite waste characterization sample will be collected to properly profile the waste material prior to transportation and disposal at the accepting disposal facility. The waste characterization sample (WC01) will be used to prepare a full profile of the waste. **Table 1** specifies the analytical parameters required for waste profiling purposes determined by the requirements of the receiving landfill. Waste characterization analytical parameters include:

- Total characterization leachate procedure (TCLP) metals
- TCLP VOCs
- TCLP semi-volatile organic compounds
- TCLP herbicides and pesticides

Old Dominion Landfill located in Richmond, Virginia, has been tentatively selected as the off-site disposal facility, pending USEPA's approval. USEPA's approval of the facility will ensure it complies with USEPA's Off-Site Rule. The Off-Site Rule was promulgated on September 22, 1993 (52 Federal Register [FR] 49200). The regulatory citation is 40 Code of Federal Regulations (CFR) 300.440. It requires that Comprehensive Environmental Response, Compensation, and Liability Act (CERCLA) wastes may only be placed in a facility operating in compliance with the Resource Conservation and Recovery Act (RCRA) or other applicable Federal or State requirements.

Reporting

The data collected will be formally presented in the Remedial Design Report and will be used to define the vertical and horizontal extent of the soil excavation.

Schedule

The work will be scheduled within two weeks following Army concurrence with this Work Plan. Further, this Work Plan will be provided to USEPA and the Maryland Department of the Environment and serve as notification of the upcoming work. Per the Federal Facility Agreement, stakeholders will also be notified of the upcoming fieldwork two weeks prior to field mobilization. ARCADIS anticipates one week is needed to complete the scope described in this Work Plan.

Please contact the undersigned at 410-987-0032 if you have any questions regarding this Work Plan.

Sincerely,

ARCADIS

Brian R. Stempowski, P.E., PMP
Phase Manager

Tim Llewellyn
Project Manager

Attachments:

Table 1 – Planned Sample Table
Figure 1 – Site Cleanup Level Exceedances in Soil
Figure 2 – Proposed Pre-Excavation Sampling Grid

References

ARCADIS U.S. Inc. (ARCADIS). 2010a. Waste Management Plan (WMP) for the Performance Based Acquisition at Fort Meade. Final. October 2010.

ARCADIS. 2010b. Health and Safety Plan (HASP) for the Performance Based Acquisition at Fort Meade. Final. October 2010.

ARCADIS. 2011a. Quality Assurance Project Plan (QAPP) for the Performance Based Acquisition at Fort Meade. Final. March 2011.

ARCADIS. 2011b. Sample and Analysis Plan (SAP) for the Performance Based Acquisition at Fort Meade. Final. March 2011.

ARCADIS. 2011c. Remedial Investigation Report, FGGM-13 Former Pesticide Shop. Fort George G. Meade, Maryland. Final. October 2011.

U.S. Army. 2012. Record of Decision, FGGM-13 Former Pesticide Shop. Fort George G. Meade, Maryland. Final. September 2012.

Tables

Table 1 - Pre-excavation Planned Sample Table
FGGM 13 - Former Pesticide Shop
Fort George G. Meade, Maryland

Table 1 - Pre-excavation Planned Sample Table							Analyte	Pesticides	VOCs	TCLP VOCs	TCLP SVOCs	TCLP Metals	TCLP Pesticides	TCLP Herbicides	Comments
							Method	8081	8260	8260B	8270B	6010C	8081	8151	
Location ID	Sample ID	Sample Depth (ft bgs)	Batch Number	Sample Type	Matrix	QA/QC Identification	Container	9 oz. Jar	Encore Set	9 oz. Jar	9 oz jar	9 oz jar	9 oz jar	9 oz jar	
							Quanitity Required	1	1	1	1	1	1	1	
							Laboratory	Shealy	Shealy	Shealy	Shealy	Shealy	Shealy	Shealy	
SB01	SB01(0-2)	0-2	1	Discrete	SO			1							
SB01	SB01(4-6)	4-6	1	Discrete	SO			1							
SB01	SB01(8-10)	8-10	2	Discrete	SO	MS/MSD		3							
SB02	SB02(0-2)	0-2	1	Discrete	SO			1							
SB02	SB02(4-6)	4-6	1	Discrete	SO			1							
SB02	SB02(8-10)	8-10	2	Discrete	SO			1							
SB03	SB03(0-2)	0-2	1	Discrete	SO			1							
SB03	SB03(4-6)	4-6	1	Discrete	SO			1							
SB03	Dup01(4-6)	4-6	1	Discrete	SO	Duplicate of SB03(4-6)		1							
SB03	SB03(8-10)	8-10	2	Discrete	SO			1							
SB04	SB04(0-2)	0-2	1	Discrete	SO			1							
SB04	SB04(4-6)	4-6	1	Discrete	SO			1							
SB04	SB04(8-10)	8-10	2	Discrete	SO			1							
SB05	SB05(0-2)	0-2	1	Discrete	SO			1	1						
SB05	SB05(4-6)	4-6	1	Discrete	SO			1	1						
SB05	SB05(8-10)	8-10	1	Discrete	SO			1	1						
SB06	SB06(0-2)	0-2	1	Discrete	SO			1							
SB06	SB06(4-6)	4-6	1	Discrete	SO			1							
SB06	SB06(8-10)	8-10	2	Discrete	SO			1							
SB07	SB07(0-2)	0-2	1	Discrete	SO			1							
SB07	SB07(4-6)	4-6	1	Discrete	SO			1							
SB07	SB07(8-10)	8-10	2	Discrete	SO			1							
SB08	SB08(0-2)	0-2	1	Discrete	SO			1							
SB08	Dup02(0-2)	0-2	1	Discrete	SO	Duplicate of SB08(0-2)		1							
SB08	SB08(4-6)	4-6	1	Discrete	SO			1							
SB08	SB08(8-10)	8-10	2	Discrete	SO			1							
SB09	SB09(0-2)	0-2	1	Discrete	SO			1							
SB09	SB09(4-6)	4-6	1	Discrete	SO			1							
SB09	SB09(8-10)	8-10	2	Discrete	SO			1							
SB10	SB10(0-2)	0-2	1	Discrete	SO			1							
SB10	SB10(4-6)	4-6	1	Discrete	SO			1							
SB10	SB10(8-10)	8-10	2	Discrete	SO			1							
SB11	SB11(0-2)	0-2	1	Discrete	SO			1							
SB11	SB11(4-6)	4-6	1	Discrete	SO			1							
SB11	SB11(8-10)	8-10	2	Discrete	SO			1							
WC01	WC(xxxxxx)	NA	N/A	Composite	SO			1	1	1	1	1	1	1	
							Total	38	4	1	1	1	1	1	

Notes:
VOCs - volatile organic compounds
SVOCs - semi-volatile organic compounds
TCLP - total characterization leachate procedures
SO - Soil
WC - Waste Characterization
NA - Not applicable
QA/QC - quality assurance / quality control
MS/MSD - matrix spike / matrix spike duplicate

Figures

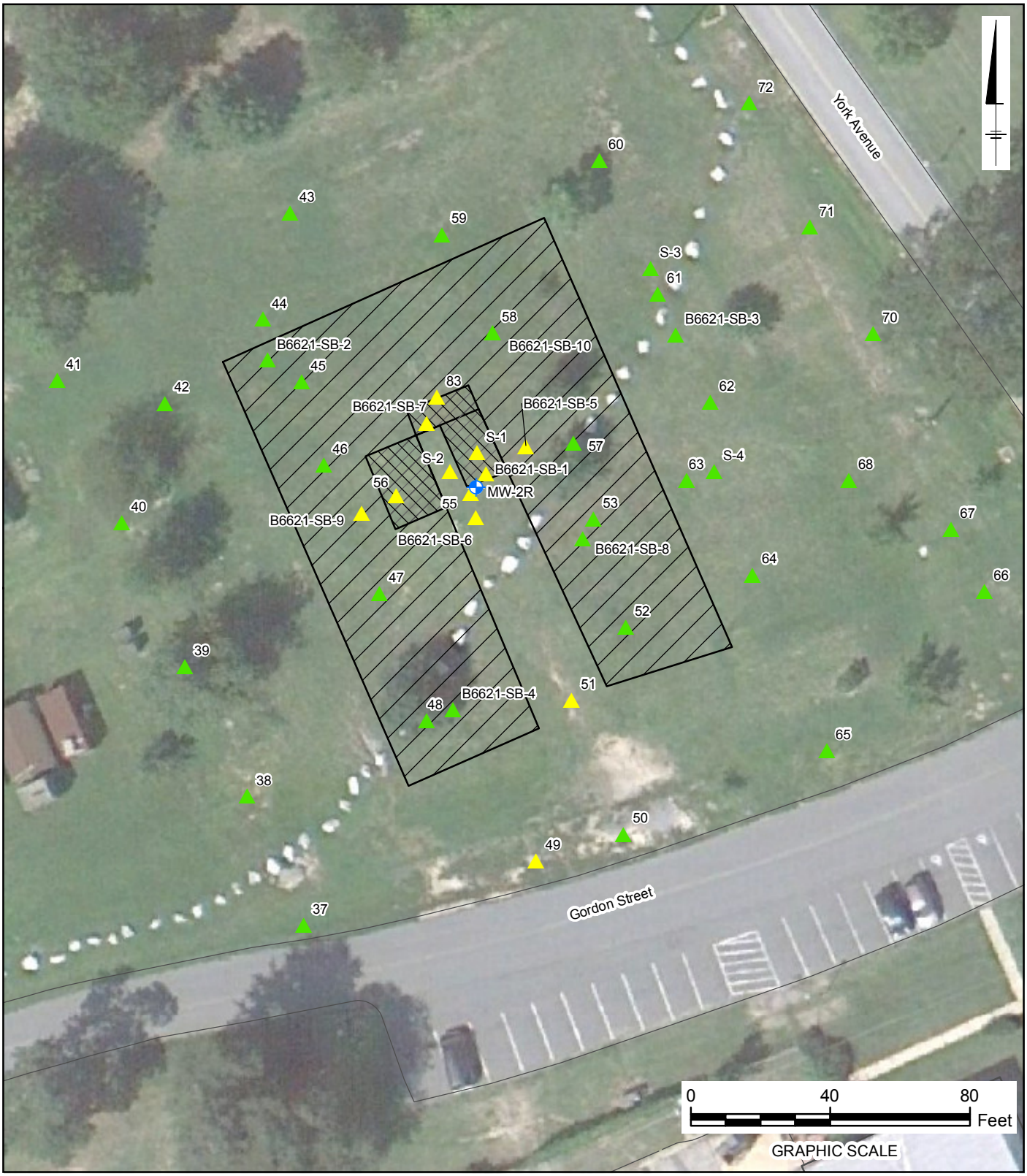

Legend:

- No Exceedance
- Exceeds Site Cleanup Level (SCL)
- Monitoring Well
- Former Pesticide Shop Areas
- Former Building 6621

Notes:

1. Chlordane SCL is 16.21 mg/kg
2. Heptachlor Epoxide SCL is 0.77 mg/kg
3. Imagery 8/29/2010 Google Earth Pro, Accessed 5/1/2012 © 2012 Google, 2012 Geoeye, U.S. Geological Survey

FGGM-13 FORMER PESTICIDE SHOP, BUILDING 6621
FORT GEORGE G. MEADE, MARYLAND

Site Cleanup Level Exceedances in Soil

ARCADIS

FIGURE
1

CITY: MPLS DIV/GROUP: IM DB: MG LD: RK
FORT MEADE
Path: G:\GIS\Projects\Fort_Meade\ArcMap\Pesticide_Shop\2012\SCLE_Soil_Pest_20120914.mxd

Legend:

- Proposed Soil Boring Location
- Monitoring Well
- Sampling Grid
- Former Pesticide Shop Areas
- Former Building 6621

Notes:

1. Imagery 8/29/2010 Google Earth Pro, Accessed 5/1/2012 © 2012 Google, 2012 Geoeye, U.S. Geological Survey

FGGM-13 FORMER PESTICIDE SHOP, BUILDING 6621
FORT GEORGE G. MEADE, MARYLAND

Proposed Pre-Excavation Sampling Grid

ARCADIS

FIGURE
2

CITY: MPLS DIV/GROUP: IM DB: MG LD: RK
FORT MEADE
Path: G:\GIS\Projects\Fort_Meade\ArcMap\Pesticide_Shop\2012\Sample_Grid_Pest_20121119.mxd

Round 2 Work Plan

-----Original Message-----
From: Tegtmeyer, Denise A CTR (US) [mailto:denise.a.tegtmeyer.ctr@mail.mil]
Sent: Thursday, January 17, 2013 11:33 AM
To: Burchette.John@epamail.epa.gov
Cc: Elisabeth Green; Fluck, Paul V CIV (US); Llewellyn, Tim; Stempowski, Brian; Walworth, Nicole U CTR (US); Knight, George B CIV (US)
Subject: RE: Pesticide Shop: Additional Pre-excavation Delineation (UNCLASSIFIED)

Classification: UNCLASSIFIED
Caveats: NONE

John,
Here is the promised sample table and figure. Also, the schedule has been updated, and the sampling will be conducted on 1/30/13.

Denise Tegtmeyer, PE
Installation Restoration Program (Versar, Inc.) | Fort George G. Meade
301.677.9559 direct | 443.857.4036 mobile

-----Original Message-----
From: Tegtmeyer, Denise A CTR (US)
Sent: Wednesday, January 09, 2013 3:24 PM
To: Burchette.John@epamail.epa.gov
Cc: Elisabeth Green; Fluck, Paul V CIV (US); Llewellyn, Tim; Stempowski, Brian
Subject: Pesticide Shop: Additional Pre-excavation Delineation (UNCLASSIFIED)

Classification: UNCLASSIFIED
Caveats: NONE

John,

The Army has evaluated the results of the Pesticide Shop pre-excavation samples collected to date. We determined that additional sampling is required to complete delineation to the north, east and south. We intend to install approximately 10 additional soil borings and collects samples for analysis of chlordane and heptachlor epoxide in accordance with the existing Work Plan. We are drafting a figure and a planned sample table and will provide that as soon as it is available.

Please consider this email the required notice of planned sampling as we plan to perform this sampling on or after 1/23/13.

Let us know if you have any questions.
Thanks - Denise

Denise Tegtmeyer, PE
Installation Restoration Program | Fort George G. Meade | Directorate of Public Works - Environmental Division (Versar, Inc.)
4215 Roberts Ave, Room #320| Fort Meade, MD 20755-7068
301.677.9559 direct | 443.857.4036 mobile | 301.677.9001 fax

Table 1 - Pre-excavation Planned Sample Table
FGGM 13 - Former Pesticide Shop
Fort George G. Meade, Maryland

Table 1 - Pre-excavation Planned Sample Table							Analyte	Pesticides	Boring Installation Order
							Method	8081	
Location ID	Sample ID	Sample Depth (ft bgs)	Batch Number	Sample Type	Matrix	QA/QC Identification	Container	9 oz. Jar	
							Quanitity Required	1	
							Laboratory	Shealy	
SB03A	SB03A(10-12)	10-12	1	Discrete	SO			1	1
SB03A	DUP01(10-12)	10-12	1	Discrete	SO	Duplicate of SB03A(10-12)		1	
SB03A	SB03A(12-14)	12-14	2	Discrete	SO			1	
SB12	SB12(0-2)	0-2	1	Discrete	SO			1	2
SB12	SB12(4-6)	4-6	1	Discrete	SO			1	
SB12	SB12(8-10)	8-10	2	Discrete	SO			1	
SB13	SB13(0-2)	0-2	1	Discrete	SO			1	3
SB13	SB13(4-6)	4-6	1	Discrete	SO			1	
SB13	SB13(8-10)	8-10	2	Discrete	SO			1	
SB14	SB14(0-2)	0-2	1	Discrete	SO			1	4
SB14	SB14(4-6)	4-6	1	Discrete	SO			1	
SB14	SB14(8-10)	8-10	2	Discrete	SO			1	
SB15	SB15(0-2)	0-2	1	Discrete	SO			1	5
SB15	SB15(4-6)	4-6	1	Discrete	SO			1	
SB15	SB15(8-10)	8-10	2	Discrete	SO			1	
SB16	SB16(0-2)	0-2	1	Discrete	SO			1	6
SB16	SB16(4-6)	4-6	1	Discrete	SO			1	
SB16	SB16(8-10)	8-10	2	Discrete	SO			1	
SB17	SB17(0-2)	0-2	1	Discrete	SO			1	7
SB17	SB17(4-6)	4-6	2	Discrete	SO			1	
SB18	SB18(0-2)	0-2	1	Discrete	SO	MS/MSD		3	8
SB18	SB18(4-6)	4-6	2	Discrete	SO			1	
SB19	SB19(0-2)	0-2	2	Discrete	SO			1	11
SB19	SB19(4-6)	4-6	2	Discrete	SO			1	
SB20	SB20(0-2)	0-2	2	Discrete	SO			1	12
SB20	SB20(4-6)	4-6	2	Discrete	SO			1	
SB21	SB21(0-2)	0-2	2	Discrete	SO			1	13
SB21	SB21(4-6)	4-6	2	Discrete	SO			1	
SB22	SB22(0-2)	0-2	2	Discrete	SO			1	14
SB22	SB22(4-6)	4-6	2	Discrete	SO			1	
SB22	DUP02(4-6)	4-6	2	Discrete	SO	Duplicate of SB22(4-6)		1	
SB23	SB23(0-2)	0-2	1	Discrete	SO			1	9
SB23	SB23(4-6)	4-6	2	Discrete	SO			1	
SB24	SB24(0-2)	0-2	1	Discrete	SO			1	10
SB24	SB24(4-6)	4-6	2	Discrete	SO			1	
							Total	37	

Notes:
VOCs - volatile organic compounds
SVOCs - semi-volatile organic compounds
TCLP - total characterization leachate procedures
SO - Soil
WC - Waste Characterization
NA - Not applicable
QA/QC - quality assurance / quality control
MS/MSD - matrix spike / matrix spike duplicate

Legend:

Soil Boring Location

- Round 1
- Round 2
- Sampling Grid
- Monitoring Well
- Former Pesticide Shop Areas
- Former Building 6621

Notes:

1. Imagery 8/29/2010 Google Earth Pro, Accessed 5/1/2012 © 2012 Google, 2012 Geoeye, U.S. Geological Survey

FGGM-13 FORMER PESTICIDE SHOP, BUILDING 6621
FORT GEORGE G. MEADE, MARYLAND

Pre-Excavation Sampling Grid

ARCADIS

FIGURE
1

CITY: MPLS DIV/GROUP: IM DB: MG LD: RK
FORT MEADE
Path: G:\GIS\Projects\Fort_Meade\ArcMap\Pesticide_Shop\2013\Sample_Grid_Pest_20130111.mxd

Round 3 Work Plan

ARCADIS U.S., Inc.
1114 Benfield Boulevard
Suite A
Millersville
Maryland 21108
Tel 410 987 0032
Fax 410 987 4392
www.arcadis-us.com

ENVIRONMENT

Mr. Paul Fluck, P.G., REP
U.S. Army Garrison Fort George G. Meade
Directorate of Public Works, Environmental Division
4215 Roberts Ave., Room 320
Fort Meade, Maryland 20755-7068

Subject:
Soil Sampling Notification
Former Pesticide Shop, Building 6621 (FGGM-13)
Fort George G. Meade, Maryland
Contract W91ZLK-05-D-0015—Task Order 0005

Date:
13 June 2013

Contact:
Brian Stempowski

Phone:
410.923.7828

Email:
Brian.stempowski@arcadis-us.com

Our ref:
GP09MEAD.PEST

Dear Mr. Fluck:

This Soil Sampling Notification (Notification) summarizes the additional sampling and analysis required for characterization of pesticide impacted soil at the Former Pesticide Shop (FGGM 13) proposed for transportation and disposal during the upcoming removal action. In summary, the waste profile samples collected to date indicate that soil generated at the Site may be disposed of in one of three manners as follows:

- Hazardous soil that exceeds 50 part per million (ppm) of total chlordane will require thermal treatment at the disposal facility to reduce the chlordane concentrations prior to final disposal;
- Hazardous soil that are below 50 ppm will not require thermal treatment but will still require disposal as a hazardous waste facility; and
- Finally, a portion of the soil to be disposed of is likely to be classified as non-hazardous.

Additional waste characterization sampling is required to classify the soil as one of the three aforementioned categories and to further refine the volume of soil associated with each disposal option. Additional waste characterization sampling will fully characterize the soil in-situ prior to implementing the removal action to ensure all excavated soil is disposed of in the appropriate manner. This Notification also presents an approach for additional sampling and analysis necessary to confirm the final extent of excavation proposed in the Record of Decision (U.S. Army, 2012).

All field activities associated with this scope of work will be completed in accordance with procedures established in the site-wide plans developed by ARCADIS U.S., Inc. (ARCADIS) for work under the Fort George G. Meade (FGGM) Performance Based Acquisition, number W91ZK-05-D-0015:

- Waste Management Plan for the Performance Based Acquisition at FGGM (ARCADIS, 2010a)
- Health and Safety Plan for the Performance Based Acquisition at FGGM (ARCADIS, 2010b)
- Quality Assurance Project Plan (QAPP) for the Performance Based Acquisition at FGGM (ARCADIS, 2011a)
- Sample and Analysis Plan (SAP) for the Performance Based Acquisition at FGGM (ARCADIS, 2011b)

Furthermore, all subsurface work presented in this Notification will be completed in accordance with FGGM Excavation Permit Application Procedures. All potential boring locations will be inspected for underground utilities and surface mark-outs painted by a private utility locating subcontractor.

Additional Waste Characterization

Waste characterization soil samples will be collected utilizing direct-push technology (DPT) with 4 foot (ft) clear acetate sleeves. **Figure 1** presents the proposed sampling grid demarcating the approximate location of 28 waste characterization DPT borings (note these are shown in the alphanumeric grid system on the figure). The 20 ft sampling grid established during the previous pre-excavation sampling events was emulated for this round of sampling; however, each 20 by 20 ft grid cell was divided into four smaller 10 by 10 ft grid cells to refine soil characterization for disposal by the truck load (approximately 15 cubic yards). DPT borings will be installed in the approximate center of each 10 by10 ft grid cell labeled with an alphanumeric character. Boring locations may be adjusted in the field based upon visual observations of soil samples and site constraints (i.e., utilities, below ground structures, above ground structures).

Soil samples will be collected in 4-ft depth intervals and composited for each boring. An additional composite sample will be prepared for each 20 by 20 ft cell and will be representative of the four samples that comprise the 20 by 20 ft area. Terminal sample depths were determined based on an evaluation of results collected during

previous rounds of sampling and are summarized in **Table 1**. Soil samples will be submitted to Shealy Environmental Services, Inc. for analysis of both discrete chlordane and heptachlor epoxide and toxicity characteristic leaching procedure (TCLP) chlordane and heptachlor epoxide via United States Environmental Protection Agency (USEPA) method 8081.

Soil samples will be segregated and analyzed sequentially in two separate laboratory batches. Laboratory batch 1 samples will include the composite samples representative of the 20 by 20 ft cells. The remaining composite samples will be held for analysis (laboratory batch 2) pending the results of the 20 by 20 ft samples. If the composite samples exceed the TCLP chlordane and heptachlor epoxide threshold limit of 0.03 milligrams per liter (mg/L) and 0.008 mg/L; respectively, then the laboratory batch 2 samples (the discrete samples that represent the 10 by 10 ft sub-grid) will be released for total chlordane and heptachlor epoxide analysis. This process will allow the determination of which soil will be characterized as hazardous; and if hazardous, the appropriate treatment and disposal option.

Large plastic bags will be used to homogenize composite samples limiting the amount of decontamination required during sampling activities. All non-dedicated field equipment will be decontaminated prior to use on-site, between each drilling location, and prior to leaving the site. All decontamination procedures will be conducted as specified in applicable ARCADIS standard operating procedure as well as the approved SAP (ARCADIS, 2010a) and the QAPP (ARCADIS, 2010b). Investigation derived waste (IDW) will be containerized and staged at FGGM 13. IDW will be disposed during the removal action. Upon completion of sampling activities, probe holes will be abandoned by backfilling with soil or placing dry bentonite into the probe hole, the upper surface of which will be hydrated. The ground surface will be sealed using approximately 6 to 12 inches of the surrounding native soil.

Pre-Excavation Delineation Sampling

To date two rounds of pre-excavation sampling have been conducted (November 2012 and January 2013) to delineate the extent of pesticide impacted soils requiring excavation. Based upon the results of the previous rounds of sampling, the horizontal and vertical extent of the proposed excavation area is substantially delineated with minor exception. Additional pre-excavation sampling is required to confirm the northern (SB12 and SB13) and eastern (SB15 and SB16) limit of excavation at 8–10 ft below ground surface (bgs). Four DPT borings (SB-12A, SB-13A, SB-15A and SB-16A) will be installed to a terminal depth of 10 ft at the locations depicted in **Figure 1**. One soil sample will be collected from each boring and

composited from 8-10 ft bgs. Composite samples will be collected consistent with the methodology presented above for waste characterization and submitted to Shealy Environmental Services Inc. for analysis of chlordane via USEPA method 8081. Proposed pre-excavation delineation samples will be included in laboratory batch 1.

Reporting

A letter style report, summarizing the results of the additional waste characterization data and selection of the treatment and disposal facility or facilities, will be transmitted to the Army, USEPA, and the Maryland Department of the Environment for review and approval prior to off-site disposal. The final off-site disposal facility will be approved by the Army and regulatory agencies prior to transport of waste material for treatment and in compliance with USEPA's Off –Site Rule promulgated on September 22, 1993 (40 Code of Federal Regulations 300.440). The Off-Site Rule mandates that wastes generated under Comprehensive Environmental Response, Compensation, and Liability Act may only be placed in a facility operating in compliance with the Resource Conservation and Recovery Act or other applicable Federal or State requirements.

Schedule

The work presented herein is scheduled to occur the week of June 17-21, 2013. ARCADIS anticipates one week is needed to complete the scope described in this Notification.

Please contact the undersigned at 410-987-0032 if you have any questions regarding this Soil Sampling Notification.

Sincerely,

ARCADIS

Brian R. Stempowski, P.E., PMP
Phase Manager

Tim Llewellyn
Project Manager

Attachments:

Table 1 – Pre-excavation Planned Sample Table
Figure 1 – Proposed Pre-Excavation Sampling Grid

References

ARCADIS U.S. Inc. (ARCADIS). 2010a. Waste Management Plan (WMP) for the Performance Based Acquisition at Fort Meade. Final. October 2010.

ARCADIS. 2010b. Health and Safety Plan (HASP) for the Performance Based Acquisition at Fort Meade. Final. October 2010.

ARCADIS. 2011a. Quality Assurance Project Plan (QAPP) for the Performance Based Acquisition at Fort Meade. Final. March 2011.

ARCADIS. 2011b. Sample and Analysis Plan (SAP) for the Performance Based Acquisition at Fort Meade. Final. March 2011.

ARCADIS. 2011c. Remedial Investigation Report, FGGM-13 Former Pesticide Shop. Fort George G. Meade, Maryland. Final. October 2011.

U.S. Army. 2012. Record of Decision, FGGM-13 Former Pesticide Shop. Fort George G. Meade, Maryland. Final. September 2012.

Tables

Table 1 - Pre-excavation Planned Sample Table
FGGM 13 - Former Pesticide Shop
Fort George G. Meade, Maryland

Table 1 - Pre-excavation Planned Sample Table						Analyte	Pesticides	TCLP Pesticides
						Method	8081	8081
						Container	9 oz. Jar	9 oz jar
Location ID	Cell ID[1]	Sample ID	Sample Depth (ft bgs)	Sample Type	Matrix	Quanitity Required	1	1
						Laboratory	Shealy	Shealy
Laboratory Batch 1 Samples								
SB02	COMP	SB02-COMP(0-4)	0-4	Composite	SO		0	1
SB02	COMP	SB02-COMP(4-8)	4-8	Composite	SO		0	1
SB02	COMP	SB02-COMP(8-12)	8-12	Composite	SO		0	1
SB03	COMP	SB03-COMP(0-4)	0-4	Composite	SO		0	1
SB03	COMP	SB03-COMP(4-8)	4-8	Composite	SO		0	1
SB03	COMP	SB03-COMP(8-12)	8-12	Composite	SO		0	1
SB03	COMP	SB03-COMP(12-14)	12-14	Composite	SO		0	1
SB05	COMP	SB05-COMP(0-4)	0-4	Composite	SO		0	1
SB05	COMP	SB05-COMP(8-12)	8-12	Composite	SO		0	1
SB06	COMP	SB06-COMP(0-4)	0-4	Composite	SO		0	1
SB06	COMP	SB06-COMP(8-12)	8-12	Composite	SO		0	1
SB08	COMP	SB08-COMP(0-4)	0-4	Composite	SO		0	1
SB09	COMP	SB09-COMP(0-4)	0-4	Composite	SO		0	1
SB24	COMP	SB24-COMP(0-4)	0-4	Composite	SO		0	1
SB12A	--	SB12A(8-10)	8-10	Composite	SO		1	1
SB13A	--	SB13A(8-10)	8-10	Composite	SO		1	1
SB15A	--	SB15A(8-10)	8-10	Composite	SO		1	1
SB16A	--	SB16A(8-10)	8-10	Composite	SO		1	1
Laboratory Batch 2 Samples								
SB02	1A	SB02-1A(0-4)	0-4	Composite	SO		1	1
SB02	1A	SB02-1A(4-8)	4-8	Composite	SO		1	1
SB02	1A	SB02-1A(8-12)	8-12	Composite	SO		1	1
SB02	2A	SB02-2A(0-4)	0-4	Composite	SO		1	1
SB02	2A	SB02-2A(4-8)	4-8	Composite	SO		1	1
SB02	2A	SB02-2A(8-12)	8-12	Composite	SO		1	1
SB02	1B	SB02-1B(0-4)	0-4	Composite	SO		1	1
SB02	1B	SB02-1B(4-8)	4-8	Composite	SO		1	1
SB02	1B	SB02-1B(8-12)	8-12	Composite	SO		1	1
SB02	2B	SB02-2B(0-4)	0-4	Composite	SO		1	1
SB02	2B	SB02-2B(4-8)	4-8	Composite	SO		1	1
SB02	2B	SB02-2B(8-12)	8-12	Composite	SO		1	1
SB03	3A	SB03-3A(0-4)	0-4	Composite	SO		1	1
SB03	3A	SB03-3A(4-8)	4-8	Composite	SO		1	1
SB03	3A	SB03-3A(8-12)	8-12	Composite	SO		1	1
SB03	3A	SB03-3A(12-14)	12-14	Composite	SO		1	1
SB03	4A	SB03-4A(0-4)	0-4	Composite	SO		1	1
SB03	4A	SB03-4A(4-8)	4-8	Composite	SO		1	1
SB03	4A	SB03-4A(8-12)	8-12	Composite	SO		1	1
SB03	4A	SB03-4A(12-14)	12-14	Composite	SO		1	1
SB03	3B	SB03-3B(0-4)	0-4	Composite	SO		1	1
SB03	3B	SB03-3B(4-8)	4-8	Composite	SO		1	1
SB03	3B	SB03-3B(8-12)	8-12	Composite	SO		1	1
SB03	3B	SB03-3B(12-14)	12-14	Composite	SO		1	1
SB03	4B	SB03-4B(0-4)	0-4	Composite	SO		1	1
SB03	4B	SB03-4B(4-8)	4-8	Composite	SO		1	1
SB03	4B	SB03-4B(8-12)	8-12	Composite	SO		1	1
SB03	4B	SB03-4B(12-14)	12-14	Composite	SO		1	1
SB05	1C	SB05-1C(0-4)	0-4	Composite	SO		1	1
SB05	1C	SB05-1C(8-12)	8-12	Composite	SO		1	1

Table 1 - Pre-excavation Planned Sample Table
FGGM 13 - Former Pesticide Shop
Fort George G. Meade, Maryland

Table 1 - Pre-excavation Planned Sample Table						Analyte	Pesticides	TCLP Pesticides
						Method	8081	8081
Location ID	Cell ID[1]	Sample ID	Sample Depth (ft bgs)	Sample Type	Matrix	Container	9 oz. Jar	9 oz jar
						Quanitity Required	1	1
						Laboratory	Shealy	Shealy
SB05	2C	SB05-2C(0-4)	0-4	Composite	SO		1	1
SB05	2C	SB05-2C(8-12)	8-12	Composite	SO		1	1
SB05	1D	SB05-1D(0-4)	0-4	Composite	SO		1	1
SB05	1D	SB05-1D(8-12)	8-12	Composite	SO		1	1
SB05	2D	SB05-2D(0-4)	0-4	Composite	SO		1	1
SB05	2D	SB05-2D(8-12)	8-12	Composite	SO		1	1
SB06	3C	SB06-3C(0-4)	0-4	Composite	SO		1	1
SB06	3C	SB06-3C(8-12)	8-12	Composite	SO		1	1
SB06	4C	SB06-4C(0-4)	0-4	Composite	SO		1	1
SB06	4C	SB06-4C(8-12)	8-12	Composite	SO		1	1
SB06	3D	SB06-3D(0-4)	0-4	Composite	SO		1	1
SB06	3D	SB06-3D(8-12)	8-12	Composite	SO		1	1
SB06	4D	SB06-4D(0-4)	0-4	Composite	SO		1	1
SB06	4D	SB06-4D(8-12)	8-12	Composite	SO		1	1
SB08	1E	SB08-1E(0-4)	0-4	Composite	SO		1	1
SB08	2E	SB08-2E(0-4)	0-4	Composite	SO		1	1
SB08	1F	SB08-1F(0-4)	0-4	Composite	SO		1	1
SB08	2F	SB08-2F(0-4)	0-4	Composite	SO		1	1
SB09	3E	SB09-3E(0-4)	0-4	Composite	SO		1	1
SB09	4E	SB09-4E(0-4)	0-4	Composite	SO		1	1
SB09	3F	SB09-3F(0-4)	0-4	Composite	SO		1	1
SB09	4F	SB09-4F(0-4)	0-4	Composite	SO		1	1
SB24	1G	SB24-1G(0-4)	0-4	Composite	SO		1	1
SB24	2G	SB24-2G(0-4)	0-4	Composite	SO		1	1
SB24	1H	SB24-1H(0-4)	0-4	Composite	SO		1	1
SB24	2H	SB24-2H(0-4)	0-4	Composite	SO		1	1
						Total	**60**	**74**

Notes:
"--" - Proposed pre-excavation sample to confirm the final extent of excavation.
1. Alphanumeric characters refer to the grid system depicted on Figure 1.

Figures

NOTE:

1. CHLORDANE SOIL SAMPLE RESULTS ARE IN MICROGRAMS PER KILOGRAM (µg/kg).
2. PRE-EXCAVATION SOIL SAMPLES WERE COLLECTED ON NOVEMBER 27-28, 2012 AND JANUARY 29, 2013 UTILIZING DIRECT-PUSH SAMPLING METHODOLOGY. SAMPLES WERE SUBMITTED TO SHEALY LABORATORIES IN WEST COLUMBIA, SOUTH CAROLINA FOR ANALYSIS OF CHLORDANE AND HEPTACHLOR EPOXIDE VIA UNITED STATES ENVIRONMENTAL PROTECTION AGENCY METHOD 8081.
3. BOLDED VALUES INDICATE CONCENTRATIONS ABOVE THE SITE CLEANUP LEVEL (SCL).
4. DIRECT PUSH BORINGS WILL BE INSTALLED IN THE APPROXIMATE CENTER OF EACH 10 X 10 CELL IDENTIFIED BELOW USING AN ALPHANUMERIC GRID SYSTEM.

Analyte Site Cleanup Level (ug/kg)	
Chlordane	16,210

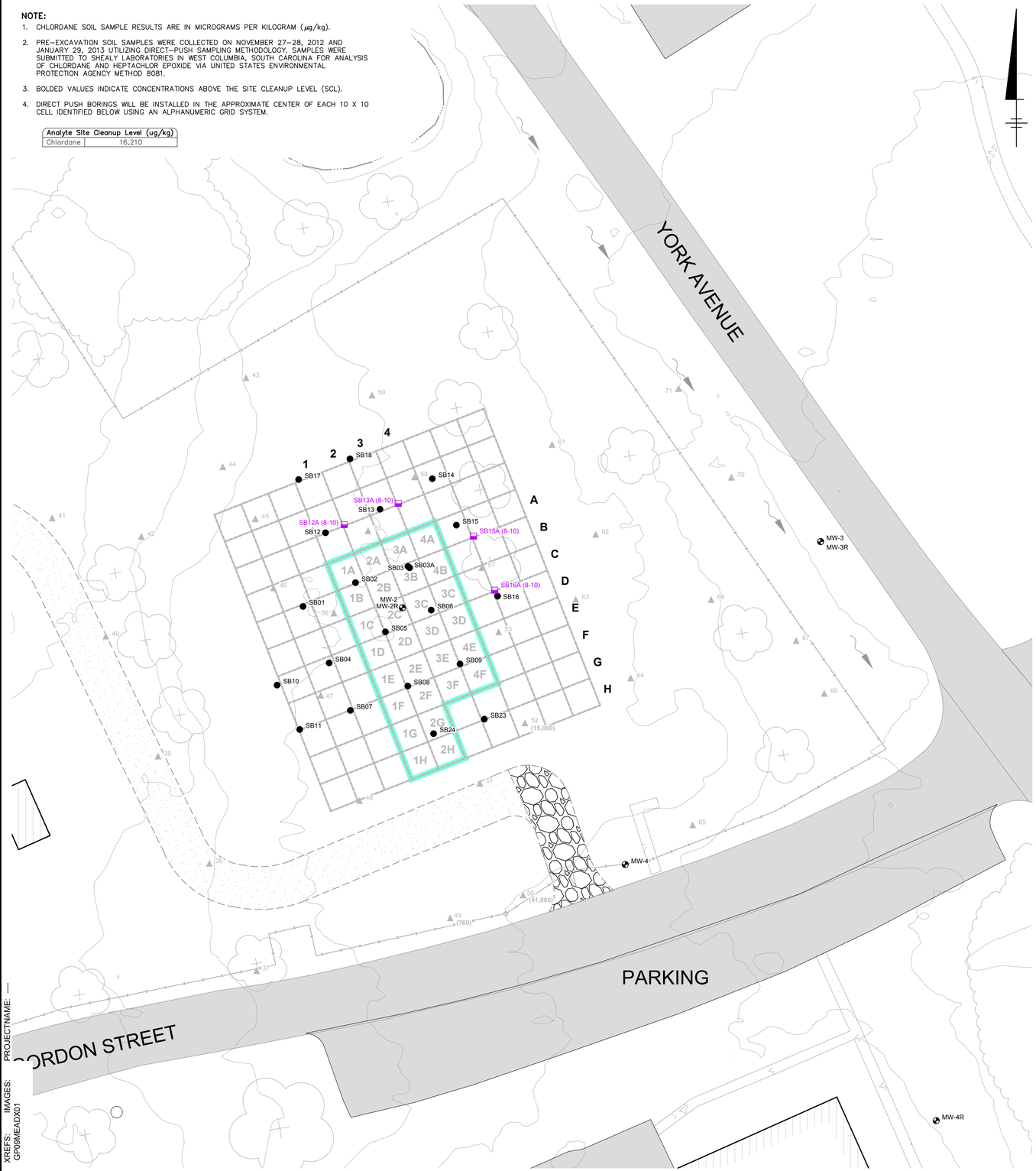

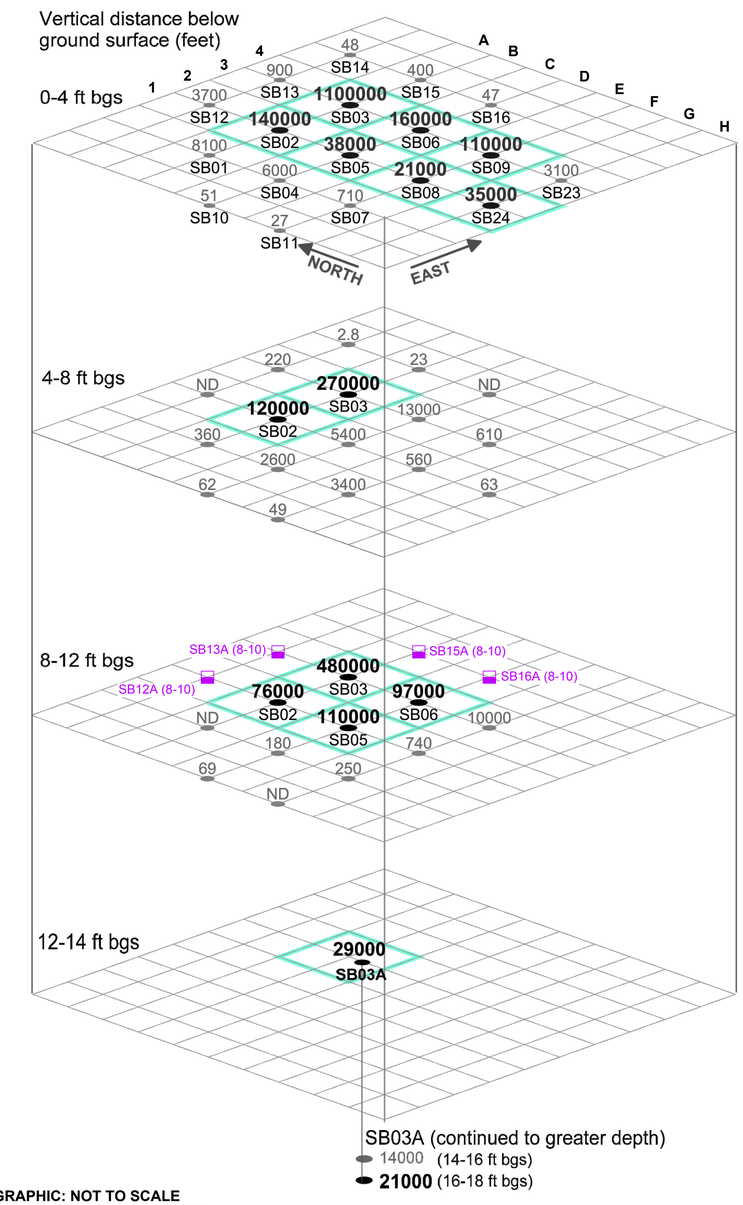

SOIL STACK GRAPHIC: NOT TO SCALE
ALL GRID CELLS ARE 10 FEET BY 10 FEET

LEGEND

- PROPOSED PRE-EXCAVATION SAMPLE LOCATION
- PRE-EXCAVATION SOIL SAMPLE LOCATION
- SAMPLE LOCATION
- MONITORING WELL
- SAMPLE GRID
- SAMPLE AREA
- DIRT ACCESS ROAD
- STABILIZED CONSTRUCTION ENTRANCE

0 20' 40'
GRAPHIC SCALE

FGGM13 FORMER PESTICIDE SHOP, BUILDING 6621
FORT MEADE, MARYLAND

PROPOSED PRE-EXCAVATION SAMPLING GRID

ARCADIS

FIGURE
1

CITY:(Reqd) DIV/GROUP:(Reqd) DB:(Reqd) LD:(Opt) PIC:(Opt) PM:(Reqd) TM:(Opt) LYR:(Opt)ON=*;OFF=*REF*
G:\ENVCAD\CRANBURY\RETURN-TO\Newtown-PA\GP09MEAD\PESTI\HG001\GP09MEADG03.dwg LAYOUT: 1 SAVED: 6/4/2013 12:39 PM ACADVER: 18.1S (LMS TECH) PAGESETUP: ---- PLOTSTYLETABLE: PLTFULL.CTB PLOTTED: 6/4/2013 12:40 PM BY: MEYER, JULIE
XREFS: IMAGES: PROJECTNAME: ----
GP09MEADX01