DEPARTMENT OF THE ARMY
US ARMY INSTALLATION MANAGEMENT COMMAND
HEADQUARTERS, UNITED STATES ARMY GARRISON
4551 LLEWELLYN AVENUE, SUITE 5000
FORT GEORGE G. MEADE, MARYLAND 20755-5000

October 29, 2014

Environmental Division

Mr. John Burchette
NPL/BRAC/Federal Facilities Branch
U.S. Environmental Protection Agency
1650 Arch Street
Philadelphia, PA 19103-2029

Dear Mr. Burchette:

Enclosed please find the October 2014 *Final Interim Removal Action Report for Operable Unit 4 Area of Concern 3 (Lower Patapsco Aquifer Study Area)* (Report). The Draft Report has been revised based on comments received from the United States Environmental Protection Agency (USEPA) on August 25, 2014 and the Maryland Department of the Environment (MDE) on September 4, 2014. The Architect of the Capitol (AOC) had no comments on the Report. Given the simplicity of the regulatory comments, responses, and Report revisions, submission of a "Draft Final" version is not warranted. Copies of the Final Report have been furnished to Mick Butler (Fort George G. Meade), Fran Coulters (U.S. Army Environmental Command), Sherry Deskins (AOC), Elisabeth Green (MDE), and the Fort Meade Restoration Advisory Board.

Written comments should be addressed to Fort. George. G. Meade, Attention: IMME-PWE (George Knight), 4216 Roberts Ave., Suite 5115, Fort Meade, Maryland 20755-7068 or george.b.knight7.civ@mail.mil.

If you have any questions, please feel free to contact Ms. Denise Tegtmeyer at (301) 677-9559 or me at (301) 677-7999.

Sincerely,

George B. Knight, PG
Acting Program Manager, Installation Restoration Program
Directorate of Public Works-Environmental Division

Enclosure

ARCADIS

Imagine the result

FINAL Interim Removal Action Report for OU-4 Area of Concern 3 (Lower Patapsco Aquifer Study Area)

Operable Unit 4, Lower Patapsco Aquifer Study Area Fort George G. Meade, Maryland

October 2014

Keith Shepherd,
Task Manager

John Cherry
Phase Manager

Tim Llewellyn
Project Manager

Final Interim Removal Action Report for OU-4 Area of Concern 3 (LPA Study Area)

Operable Unit 4, Lower Patapsco Study Area
Fort George G. Meade, Maryland

Prepared for:
U.S. Army

Prepared by:
ARCADIS U.S., Inc.
1114 Benfield Boulevard
Suite A
Millersville
Maryland 21108
Tel 410 987 0032
Fax 410 987 4392

Our Ref.:
GP09MEAD.OU4

Date:
October 2014

This document is intended only for the use of the individual or entity for which it was prepared and may contain information that is privileged, confidential and exempt from disclosure under applicable law. Any dissemination, distribution or copying of this document is strictly prohibited.

Table of Contents

Executive Summary **ES-1**

1. Introduction **1**

2. Site Background **4**

2.1 Site Location and History 4

2.2 Remedial Action Objective 4

3. Chronology of Events and Public Participation **6**

3.1 Chronology of Events 6

3.2 Public Participation 6

4. Non-Time Critical Removal Action Implementation **8**

4.1 Permitting and Compliance 8

4.2 Mobilization and Site Preparation 8

4.3 Utility Clearance and Unexploded Ordnance Support 9

4.4 Hydraulic Containment System Installation 9

4.4.1 Well Installation 9

4.4.2 Horizontal Drilling 10

4.4.3 Treatment Building Completion 11

4.4.4 System Start-Up and Shake Down 11

4.5 Investigation Derived Waste 12

4.6 Implementation of Long-term Operation and Semi-annual Sampling 13

4.7 Site Restoration and Demobilization 13

5. Deviations from Interim Removal Action Work Plan **14**

6. Performance Standards and Construction Quality Control **15**

6.1 Health and Safety 15

6.2 Construction Quality Control 15

7. Final Inspection **16**

8. Site Contact Information **17**

9. References **18**

Table of Contents

Tables

Table1 Well Construction Details

Figures

Figure 1 Site Location Map

Figure 2 Operable Unit 4 and Lower Patapsco Aquifer Study Area

Figure 3 Operable Unit 4 Lower Patapsco Aquifer Study Area PCE Detections in the Middle and Lower Patapsco Aquifer

Figure 4 Operable Unit 4 Lower Patapsco Aquifer Study Area TCE Detections in the Middle and Lower Patapsco Aquifer

Figure 5 Operable Unit 4 Lower Patapsco Aquifer Study Area CCl4 Detections in the Middle and Lower Patapsco Aquifer

Figure 6 Lower Patapsco Aquifer Study Area Hydraulic Containment System Layout

Appendices

Appendix A Survey Report (Provided on CD)

Appendix B Vertical Drilling Field Forms, Boring Logs, and State of Maryland Well Permits (Provided on CD)

Appendix C Horizontal Drilling Boring Profiles (Provided on CD)

Appendix D Laboratory Reports (Provided on CD)

D1 Influent and Effluent Analytical Laboratory Results

D2 Investigative Derived Waste Laboratory Results

Appendix E System Startup/Shakedown Field Forms and Pressure Testing Results (Provided on CD)

Appendix F Investigation Derived Waste (Provided on CD)

F1 Liquid Investigative Derived Media Infiltration Notification Letter

F2 Drill Cuttings Investigative Derived Media Disposal Notification Letter

F3 Waste Manifests

Appendix G Operation and Maintenance Manual

Appendix H Wetland Impact Plate (Provided on CD)

Appendix I Photo Log

Appendix J Response to Comments

List of Acronyms and Abbreviations

µg/L	microgram per liter
ARCADIS	ARCADIS U.S., Inc.
Army	United States Army
bgs	below ground surface
CCl_4	carbon tetrachloride
CERCLA	Comprehensive Environmental Response, Compensation, and Liability Act
CFR	Code of Federal Regulations
CSL	Closed Sanitary Landfill
EE/CA	Engineering Evaluation/Cost Analysis
E&SC	Erosion and Sediment Control
ft	feet
FGGM	Fort George G. Meade
GAC	Granular Activated Carbon
GPM	Gallons per Minute
HC	Hydraulic Containment
HDPE	High Density Polyethylene
IDW	Investigation Derived Waste
IRAR	Interim Removal Action Report
IRAWP	Interim Removal Action Work Plan
IRP	Installation Restoration Program
LPA	Lower Patapsco Aquifer
MD	Munitions Debris
MDE	Maryland Department of Environment
MEC	Munitions and Explosives of Concern

List of Acronyms and Abbreviations continued

NCP	National Oil and Hazardous Substances Pollution Contingency Plan
NTCRA	Non-Time Critical Removal Action
O&M	Operation and Maintenance
OU-4	Operable Unit 4
PCE	tetrachloroethene
PVC	Polyvinyl chloride
QA	Quality Assurance
QAPP	Quality Assurance Project Plan
QC	Quality Control
RAB	Restoration Advisory Board
RAO	Remedial Action Objective
SAP	Sampling and Analysis Plan
TCE	Trichloroethene
USAEC	United States Army Environmental Command
USEPA	United States Environmental Protection Agency
VOC	volatile organic compounds

Executive Summary

This Interim Removal Action Report (IRAR) summarizes the Non-Time Critical Removal Action (NTCRA) implemented at Fort George G. Meade, Operable Unit 4 (OU-4) and the Lower Patapsco Aquifer (LPA) Study Area (herein after referred to as "the Site" or LPA Study Area) to address the potential risks posed by elevated concentrations of volatile organic compounds in groundwater at the Site. This IRAR details the removal actions completed at the LPA Study Area, the removal actions taken at OU-4 are documented in the *Interim Removal Action Report for Operable Unit 4 Areas of Concern 1 and 2 (Buildings 2286/2276 and Building 2250)* (ARCADIS, 2014b), planned for submittal under separate cover.

Subsequent to the alternatives analysis conducted in the Engineering Evaluation/Cost Analysis (EE/CA; ARCADIS, 2013a), an Action Memorandum authorizing this NTCRA was approved and signed by the United States Army (Army) and United States Environmental Protection Agency (USEPA) on June 27, 2013, and August 22, 2013, respectively (Army, 2013). The Maryland Department of the Environment (MDE) also concurred on the selected removal action in a letter to the Army dated July 1, 2013. The action selected within the EE/CA for the LPA Study Area was Hydraulic Containment (HC) with Semi-annual Sampling of Groundwater. An Interim Removal Action Work Plan (IRAWP; ARCADIS, 2013b) was developed to direct the implementation of the NTCRA and was finalized in December 2013. An Addendum to the Interim Removal Action Work Plan was approved by the MDE on May 27, 2014 including a reduction in the analytical parameters analyzed as part of the National Pollution Discharge Elimination System permit equivalency sampling (no analysis for bacteriological and asbestos) as these analysis were deemed unnecessary given Site history.

The NTCRA was implemented in multiple mobilizations between July 2013 and March 2014 and consisted of the following components:

- Installation and development of six extraction wells;
- Installation and development of four injection wells;
- On-Site storage, treatment, and discharge of groundwater and on-site disposal of dewatered soil cuttings generated during well installation and development activities;

- Off-Site disposal of soil cuttings and general refuse generated during installation of the extraction and injection wells;
- Horizontal drilling activities associated with the installation of the subsurface piping (including 2-inch piping conduit for the communication and power lines, 2-inch and 3-inch piping for the influent lines to the treatment building, 3-inch and 4-inch effluent piping from the treatment building to the injection wells and the surface water discharge point, respectively). In total, approximately 21,000 feet of high density polyethylene piping was installed;
- Installation of two electrical transformers to power the HC groundwater treatment system and electrical wiring necessary to provide electricity to pumps, system controls, sumps and other electrical components;
- Placement and completion of the pre-fabricated treatment building containing multimedia filtration vessels, granular activated carbon vessels, transfers pumps, instrumentation and flow controls, and piping manifolds;
- Completion of a synoptic water level gauging event across the LPA Study Area monitoring well network;
- Completion of startup/shakedown testing and operation of the HC groundwater treatment system; and
- Site restoration and demobilization.

This IRAR documents construction completion for the actions conducted under the Non-Time Critical Removal Action at the LPA Study Area as outlined in the IRAWP (ARCADIS, 2013b), including installation and operation of the HC groundwater treatment system in the LPA Study Area. This report confirms system construction is complete and the interim removal action is operating as intended. Remedial Action Objectives and requirements for long-term operation, maintenance, and monitoring of the remedial system will be formalized under remedial authority in a separate OU-4 Record of Decision. Site Completion will be documented in a future Final Close Out Report after the groundwater response actions are successful and the site meets all criteria for Site Completion status, including: (1) all remedial decision documents have been completed and the selected remedy is consistent with Comprehensive Environmental Response, Compensation, and Liability Act, the National Oil and Hazardous Substances Pollution Contingency Plan, and USEPA policy and guidance;

(2) all response actions have been completed (e.g., the cleanup levels associated with the response action(s) have been achieved) and appropriately documented in the Site file, and (3) all institutional controls are in place (USEPA, 2011).

.

1. Introduction

ARCADIS U.S. Inc. (ARCADIS) has been retained by the United States Army Environmental Command (USAEC) to perform Installation Restoration Program (IRP) activities at Fort George G. Meade (FGGM), located in Anne Arundel County, Maryland. This work is being conducted under a Performance Based Contract associated with the IRP at FGGM. The full scope of services for this contract is defined in Contract W91ZLK-05-D-0015: Task 0005.

The IRP activities at FGGM are conducted under the United States Army's (Army's) Defense Environmental Restoration Program and operate principally under the Comprehensive Environmental Response, Compensation, and Liability Act (CERCLA) as amended by the Superfund Amendments and Reauthorization Act of 1986 and National Oil and Hazardous Substances Pollution Contingency Plan (NCP; 40 Code of Federal Regulations [CFR] 300). FGGM was placed on the National Priorities List on July 28, 1998. Coordination and input are provided by the United States Environmental Protection Agency (USEPA) Region III, and as appropriate, with other signatories of the FGGM Federal Facility Agreement, including the Architect of the Capitol and the Department of the Interior. Input and coordination from Maryland Department of the Environment (MDE) was also solicited.

The Engineering Evaluation/Cost Analysis (EE/CA) for Operable Unit 4 (OU-4) and the Lower Patapsco Aquifer (LPA) Study Area was developed jointly between the Army and the USEPA, with input from the community (ARCADIS, 2013a). An Action Memorandum documenting the selected removal action for each area (i.e., OU-4 Study Area and the LPA Study Area) was approved and signed by the Army and USEPA on June 27, 2013, and August 22, 2013, respectively (Army, 2013). The MDE also concurred on the selected removal action in a letter to the Army dated July 1, 2013.

This Interim Removal Action Report (IRAR) has been prepared in accordance with USEPA 540-R-98-016, Office of Solid Waste and Emergency Response Directive 9320.2-22; Exhibit 2-5, (USEPA, 2011) and presents a description of the interim removal action implemented at the OU-4/LPA Study Area (hereinafter referred to as "the Site" or the LPA Study Area). This IRAR details the removal actions completed at the LPA Study Area, the removal actions taken at OU-4 are documented in the *Interim Removal Action Report for Operable Unit 4 Areas of Concern 1 and 2 (Buildings 2286/2276 and Building 2250)* (ARCADIS, 2014b), planned for submittal under separate cover.

An Interim Removal Action Work Plan (IRAWP; ARCADIS, 2013b) was developed to direct the implementation of the Non-Time Critical Removal Action (NTCRA) and was

finalized in December 2013. An Addendum to the Interim Removal Action Work Plan was approved by the MDE on May 27, 2014 including a reduction in the analytical parameters analyzed as part of the National Pollution Discharge Elimination System permit equivalency sampling (no analysis for bacteriological and asbestos) as these analysis were deemed unnecessary given Site history.

The removal action taken at the LPA Study Area was installation of a hydraulic containment (HC) groundwater treatment system and semi-annual sampling of groundwater. The HC groundwater treatment system was designed to capture and abate mid-plume concentrations of volatile organic compounds (VOCs) in groundwater to prevent continued migration towards the FGGM property boundary. The removal action at the LPA Study Area was implemented in accordance with the IRAWP and included the following components:

- Installation and development of six extraction wells;
- Installation and development of four injection wells;
- On-Site storage, treatment, and discharge of groundwater and on-site disposal of dewatered drill cuttings generated during well installation and development activities;
- Off-Site disposal of soil cuttings and general refuse generated during installation of the extraction and injection wells;
- Horizontal drilling activities associated with the installation of the subsurface piping (including 2-inch piping conduit for the communication and power lines, 2-inch and 3-inch piping for the influent lines to the treatment building, 3-inch and 4-inch effluent piping from the treatment building to the injection wells and the surface water discharge point, respectively). In total, approximately 21,000 feet (ft) of high density polyethylene (HDPE) piping was installed;
- Installation of two new electrical transformers to power the HC groundwater treatment system and electrical wiring necessary to provide electricity to pumps, system controls, sumps and other electrical components;
- Placement and completion of the pre-fabricated treatment building containing multimedia filtration vessels, granular activated carbon (GAC) vessels, transfers pumps, instrumentation and flow controls, and piping manifolds;

- Completion of a synoptic water level gauging event across the LPA Study Area monitoring well network;
- Completion of startup/shakedown testing and operation of the HC groundwater treatment system; and
- Site restoration and demobilization.

2. Site Background

This section provides a brief summary of the Site background and the Remedial Action Objective (RAO).

2.1 Site Location and History

FGGM is located midway between the cities of Baltimore, Maryland, and Washington D.C. in Anne Arundel County, Maryland, as shown in **Figure 1**. OU-4 is located in the southeast corner of FGGM and is bounded by Morrison Street, Huber Road, and Third Street to the north (with the inclusion of Building 2286 located north of Morrison Street); Rock Avenue to the south; Chisholm Avenue to the east; and Wilson Street to the west. The LPA Study Area refers to the portion of the LPA located downgradient and southeast of OU-4 and represents the confined aquifer that outcrops to the surface at OU-4. A Site location map depicting the OU-4 site boundaries and the LPA Study Area is provided as **Figure 2**.

Historic operations at OU-4 include commercial and light industrial activities conducted following the establishment of FGGM as an active military installation in 1917. OU-4 consists of various existing buildings, demolished buildings, and open grass areas. As depicted on **Figure 2**, many of the buildings are located within a close proximity of each other and have comingled VOC plumes in groundwater. **Figures 3, 4, and 5** display the most recent tetrachloroethene (PCE), trichloroethene (TCE), and carbon tetrachloride (CCl_4) detections observed at each sampling location, respectively. The LPA is an important source of water supply on Maryland's western shore in Anne Arundel, Calvert, Charles, and Prince George's Counties, as well as Queen Anne's County on the Eastern Shore. The LPA at FGGM is approximately 100 to 140 ft thick and is observed outcropping at OU-4. Within the OU-4 Study Area near Building 2286 (**Figure 2**), the LPA is observed approximately 80 to 100 ft below ground surface (bgs). From OU-4, the LPA proceeds downgradient and to the southeast toward the southeastern FGGM property line and extends off-post beneath residential communities in Odenton, Maryland (see **Figure 2**). At the southeastern FGGM property line, the LPA is observed approximately 200 to 240 ft bgs. Detailed geological cross-sections for the OU-4/LPA Study Areas are provided in the Remedial Investigation/Feasibility Study (ARCADIS, 2014c)

2.2 Remedial Action Objective

The RAO, as stated in the EE/CA (ARCADIS, 2013a), is based on the potential risks associated with elevated VOC concentrations in groundwater at the LPA Study Area. The RAO for the NTCRA at the LPA Study Area is as follows:

- Abate elevated mid-plume concentrations of PCE and CCl_4, and associated VOCs (e.g., 410 micrograms per liter [µg/L] PCE at MW37 and 280 µg/L CCl_4 at SB38) to prevent continued migration of elevated VOC concentrations toward the FGGM property boundary where on- and off-post monitoring wells near the FGGM property boundary are already showing increasing concentrations trends as increasing VOC concentrations migrate off-post to the southeast toward existing residential wells.

3. Chronology of Events and Public Participation

This section discusses the chronology of events at OU-4 and the LPA Study Area leading to the NTCRA and the actions implemented to promote active communication between the communities affected by the NTCRA.

3.1 Chronology of Events

The following is a brief chronology of events associated with the removal action implemented at the LPA Study Area:

Date	Event
June 2013	Final EE/CA (ARCADIS, 2013a) and Action Memorandum (Army, 2013) issued.
July – August 2013	Installation and development of six extraction (EW-1 – EW-6) and four injection wells (IW-01 – IW-06) for the HC groundwater treatment system.
September 2013 – February 2014	Horizontal drilling activities for the installation of the subsurface electrical and communication pipe conduit, influent and effluent conveyance piping.
November 2013	Delivery of the HC groundwater treatment system building.
December 2013	Approval of Final IRAWP.
February 2014	Completion of the baseline synoptic groundwater gauging event prior to HC system startup.
March 2014	Startup and shakedown of the HC groundwater treatment system.
June 2014	Completion of Site restoration activities including asphalt repairs, re-grading, and seeding in disturbed areas.

3.2 Public Participation

In accordance with the NCP, public participation is required to promote active communication between the communities affected by the NTCRA at the Site. This public participation requirement of the NCP has been fulfilled by the Army in the following manner:

- Restoration Advisory Board (RAB) Meetings – Presentations were conducted at RAB meetings on March 21, 2013, and November 18, 2013, to provide details pertaining to implementation of the NTCRA and updates to the proposed schedule. RAB meetings provide an opportunity for community members (including elected RAB members) and representatives of government agencies to meet and exchange information about FGGM's environmental program.

- Public Comment Period – A public notice was published in the Capital Gazette (a local newspaper) on September 11, 2013, announcing the availability of the EE/CA for public review and comment during the public comment period from September 11, 2013, to October 11, 2013.

- Information Repositories – The Administrative Record for the Site including the EE/CA and other supporting documents pertaining to OU-4 and the LPA Study Area is located at two information repositories established by FGGM. The repositories are accessible in accordance with the American Disabilities Act, have copy facilities, and are available to the community during normal business hours. Information repositories are maintained at the following locations: Anne Arundel County Public Library – West County Library (1325 Annapolis Road, Odenton, Maryland 21113) and the Fort Meade Environmental Division office (4215 Roberts Avenue, Room 320, Fort Meade, Maryland). A Fact Sheet detailing the removal actions taken across the OU-4/LPA Study Areas was kept on-site during construction activities. Additional project information was made available to the public on Fort Meade's Environmental Management System website at www.ftmeade.army.mil/environment.

- System Commissioning and Newspaper Publication – Garrison Commander and representatives from FGGM Environmental, USEPA, and MDE jointly commissioned the OU-4/LPA Hydraulic Containment System on May 15, 2014. A follow up article was published in SoundOff on June 12, 2014 detailing the background of the OU-4/LPA project, system operational parameters, and cleanup objectives.

4. Non-Time Critical Removal Action Implementation

The following sections discuss the construction and operation of the HC groundwater treatment system installed at the LPA Study Area in accordance with the IRAWP (ARCADIS, 2013b).

4.1 Permitting and Compliance

The implementation of the NTCRA was conducted under CERCLA; therefore, per Section 300.400(e) of the NCP, 40 CFR Section 300.400(e), no federal, state, or local permits were required for on-Site activities provided that the substantive requirements of these permits were met. Permits applicable to the implementation of the NTRCA at the LPA Study Area are listed below:

- Water Appropriations Equivalency (for groundwater extraction); and
- National Pollutant Discharge Elimination System Equivalency (for surface water discharge).

The substantive requirements of the above listed permits were met during implementation of the NTRCA at the LPA Study Area. However, it should be noted that State of Maryland Well Permits for extraction and injection wells were issued by the Anne Arundel County Health Department.

4.2 Mobilization and Site Preparation

Implementation of the NTCRA at the LPA Study Area was conducted in multiple mobilizations (i.e., well installation; horizontal drilling and treatment system completion; system start-up; and site restoration). Prior to each mobilization, site preparation was conducted as appropriate for each task. In general, site preparation consisted of establishment of staging areas, mobilizing equipment and materials, and installing safety protection devices (e.g., traffic controls, fencing, signs, cones, and markers).

Installation of the influent and effluent subsurface piping was conducted via horizontal drilling; thus, limited grubbing and clearing was required to install the system infrastructure. Minimal clearing and grubbing was conducted to provide access to groundwater injection and extraction well locations and to clear the ground surface for installation of the HC treatment system foundation. Grubbed material was transported and recycled off-Site during the completion of final site restoration activities.

Soil erosion and sediment controls (E&SCs) were implemented in accordance with the Standards and Specification for Soil Erosion and Sediment Control in Maryland (MDE, 2011). E&SCs were added or modified during construction activities as needed throughout the construction phase. The E&SC measures and practices will remain in place until vegetation is established at the Site.

4.3 Utility Clearance and Unexploded Ordnance Support

Prior to initiation of intrusive activities, a utility clearance using at least three lines of evidence was conducted and included current Miss Utility of Maryland notifications, a utility locate conducted by a private utility locator, and a desktop review of available Site drawings. Additionally, a FGGM dig permit was obtained prior to the initiation of intrusive activities and was updated, as necessary, for the duration of the project.

Due to the potential presence of Munitions and Explosives of Concern and/or Munitions Debris (MEC/MD) within the footprint of the HC system, an unexploded ordnance technician remained on-Site during intrusive activities. No MEC/MD was identified at the Site during implementation of the NTRCA.

4.4 Hydraulic Containment System Installation

The following subsections summarize the installation of the HC groundwater treatment system at the LPA Study Area. The HC groundwater treatment system captures impacted groundwater migrating down-gradient from source areas in OU-4, treats VOCs using GAC, and re-injects treated groundwater back into the LPA to enhance aquifer flushing. Survey data reports are provided in **Appendix A**.

4.4.1 Well Installation

In accordance with the IRAWP (ARCADIS, 2013b), six extraction wells and four injections wells were installed along two parallel transects spanning approximately 2,600 linear ft and 3,400 linear ft, respectively in the LPA Study Area utilizing rotosonic drilling methodologies. Well installation was conducted from July 9, 2013, to August 20, 2013, by a Maryland licensed driller. Soil lithology was logged by field personnel following contact with the Middle Patapsco Clay /LPA. EW-01 through EW-06 were constructed with 50 ft. stainless steel v-wire wrapped screens installed at depths ranging between 103 – 201 ft bgs. IW-01 through IW-04 were constructed with varying lengths of stainless steel v-wire wrapped screens installed at depths between 45 – 196 ft bgs. Well development was conducted between 24 and 48 hours following well installation to ensure removal of fine grained sediments from the well screen.

Investigation derived waste (IDW) generated during well installation activities (i.e., slurry material and purged groundwater) is discussed in Section 4.5. Well construction details including survey coordinates are provided in **Table 1** and surveyed well locations are presented on **Figure 6**. Soil boring logs, well construction logs, well development logs, and State of Maryland Well Permits are provided in **Appendix B**.

Following well development activities, injection well drop tubes and submersible pumps (Grundfos Model 40S50-12) were installed in each injection well (IW-1 through IW-4) and extraction wells (EW-1 through EW-6), respectively, at depths detailed in the IRAWP (Figure C-6, Appendix D) (ARCADIS, 2013b). Injection/extraction well vault details are also included in Appendix D of the IRAWP displayed on Figures C-3 and C-4, respectively, which provide details on the well-head piping assembly.

4.4.2 Horizontal Drilling

The subsurface piping infrastructure associated with the conveyance of untreated influent from the extraction wells to the treatment system and treated effluent from the treatment system to the injection wells and the surface water discharge point was installed between September 2013 and February 2014 via horizontal directional drilling methodologies. Drilling mud generated during horizontal drilling activities was transported to a bermed staging area for dewatering purposes.

The subsurface piping infrastructure was installed at varying depths greater than 3 ft bgs. The piping network installed included 2-inch piping conduit for the communication and power lines to control pumps, sumps, and other various system controls) along the extraction well transect to the treatment building, 2-inch and 3-inch piping for the influent lines to the treatment building, 3-inch and 4-inch effluent piping from the treatment building to the injection wells and the surface water discharge point, respectively. In total, approximately 21,000 ft of HDPE piping was installed. All subsurface effluent water piping leading from the treatment building to the injection wells and the surface water discharge location were wrapped with tracer wire to facilitate identification during future utility locate procedures. Five pipe cleanouts (see **Figure 6**) were installed along the extraction well influent pipe network. Following installation of the subsurface HDPE pipe network, hydrostatic pressure testing was conducted in accordance with industry standards on 26 and 27 of February 2014. Pressure testing documentation is provided in **Appendix C**.

During installation of the piping infrastructure, twenty-three entrance/exit pits were installed to facilitate installation of the piping infrastructure and observe and document the alignment and vertical depth of the pipes below the ground surface. Measurements collected at the pits were extrapolated to graphically represent the vertical alignment of

the pipe corridor between pits. The vertical profiles and a figure depicting the location of each pit are provided in **Appendix C**. The final pipe layout is depicted on **Figure 6** and the final survey of the pipe layout is provided in **Appendix A**.

4.4.3 Treatment Building Completion

The HC groundwater treatment system was pre-fabricated in accordance with the design specifications presented in the IRAWP (ARCADIS, 2013b). The complete system was delivered within its housing building to the Site on November 14, 2013, and was leveled on the gravel foundation constructed on northwest side of Magazine Road (see **Figure 6**). Following installation of the subsurface piping infrastructure, the electrical and communication conduit and influent and effluent conveyance pipes were connected to the appropriate connections on the treatment system building. Electrical and communication leads were established within the main control panel inside the treatment building in accordance with specifications detailed in Operation and Maintenance (O&M) Manual. Following Site restoration activities detailed in Section 4.7, an enclosure around the HC groundwater treatment building was installed in accordance with design specifications provided on (Figure C-7, Appendix D) of the IRAWP (ARCADIS, 2013b)

4.4.4 System Start-Up and Shake Down

The HC groundwater treatment system startup/shakedown was initiated the week of March 10, 2014. Initial startup/shakedown testing was conducted throughout March 2014 and included the following components:

- Operational testing of each submersible pump and pump controls;
- Operational testing of all controls and interlocks of the system;
- Influent and effluent sampling; and
- System optimization to achieve designed capture zone, meet treatment requirements, and maximize injection rates. Currently, the HC system extracts approximately 30 gallons per minute (GPM) from six extraction well locations, treats the water using GAC, and the treated water (approximately 180 GPM) is re-injected downgradient into four injection wells to enhance aquifer flushing. Extraction and injection well locations are displayed on **Figure 6**.

Influent and effluent groundwater samples were collected on March 11, 2014, prior to implementing re-injection to confirm treatment. Samples were submitted to Shealy

Environmental Services for the analysis of VOCs via USEPA Method 8260B. Nine VOCs were detected at concentrations exceeding reporting limits in the influent sample including the following three constituents of concern: cis, 1,2-dichloroethene, PCE, and TCE. No VOCs were detected in the effluent sample above method detection limits. Analytical laboratory reports for influent and effluent groundwater samples collected during system startup are provided in **Appendix D1**. System startup field forms are presented in **Appendix E**.

4.5 Investigation Derived Waste

IDW generated during implementation of the NTCRA at the LPA Study Area includes the following:

- Groundwater generated during well installation and development activities;
- Soil cuttings and general refuse generated during well installation; and
- Spent carbon drums and bag filters generated during water treatment activities.

In an effort to reduce the amount of IDW transported and disposed of off-Site, groundwater generated during installation and development of the extraction and injection wells was temporarily containerized in frac tanks, pumped through a temporary treatment system comprised of GAC, and gradually infiltrated to the ground surface. Approximately 135,000 gallons of treated groundwater were discharged to the forested area south of Rock Avenue between July 24, 2013, and September 6, 2013. In accordance with the liquid Investigative Derived Media letter submitted on July 3, 2013 (**Appendix F1**), treated groundwater samples were collected at a one per 50,000 gallon frequency and analyzed for VOCs via USEPA Method 8260. Analytical laboratory reports for IDW characterization samples are provided in **Appendix D2**.

In accordance with the Investigative Derived Media letter submitted on September 3, 2013 (**Appendix F2**), approximately 12,000 gallons of dewatered soil cuttings generated during rotosonic drilling remaining in the frac tank following discharge of the groundwater was characterized and transported to the bermed area that was also used for dewatering of the horizontal drilling mud for final disposal on October 21, 2013. Prior to disposal, a characterization sample was collected and submitted to Shealy Environmental for analysis of VOCs via USEPA Method 8260. Concentrations of acetone, carbon disulfide, and methylene chloride were observed below their respective Industrial Regional Screening Levels. No additional VOCs were detected above reporting limits.

The USEPA and MDE were notified prior to disposal/discharge and concurred with the alternative disposal scenario for each media. Laboratory analytical data are provided in **Appendix D2**. Soil cuttings, spent carbon drums, filter bags, and general refuse generated during implementation of the NTCRA were characterized, labeled, manifested, and disposed of off-Site. During horizontal drilling activities in the vicinity of IW-2, trash from an informal landfill cell (Cell 3) associated with the Closed Sanitary Landfill (CSL) was encountered. The trash was segregated into a separate roll-off, profiled, manifested, and disposed of off-site with the other waste streams mentioned above. Waste manifests are also provided in **Appendix F3**.

4.6 Implementation of Long-term Operation and Semi-annual Sampling

Following installation of the HC system, semi-annual sampling of groundwater and long-term operation of the HC groundwater treatment system was implemented at the LPA Study Area in accordance with procedures and schedules developed in the IRAWP (ARCADIS, 2013b) and the O&M Manual developed for the system (**Appendix G**). It should be noted that monitoring of the HC groundwater treatment system can be done remotely as well as making other operational adjustments. Semi-annual sampling data (i.e. from monitoring well sampling) will be presented in quarterly monitoring reports submitted separate from this IRAR. The First Quarter Operation and Maintenance Report (ARCADIS, 2014a) was submitted on August 11, 2014.

4.7 Site Restoration and Demobilization

ARCADIS removed construction materials and heavy equipment and demobilized from the Site on March 7, 2014. Site restoration activities were completed in June 2014 when temperatures and weather conditions were conducive to earth work (i.e., minimal site grading), asphalt repairs, and the growth of vegetation. Grass seed and tackifier were installed to stabilize and re-vegetate the ground surface at areas disturbed during construction activities. Additional seeding events will be scheduled, as necessary, to address bare areas. Additionally, the wetland buffer area impacted during installation of EW-2 was restored in accordance with applicable local, state, and federal regulations. No additional intrusive activities (i.e., grading, vehicular traffic) will be conducted in this area during completion of restoration. As part of the restoration activities, an enclosure was installed around the HC groundwater treatment system in accordance with specifications detailed in the IRAWP (ARCADIS, 2013b). One Site-specific sign was installed on the entrance of the enclosure. The sign provides pertinent information (i.e. contact information etc.) for the HC system.

E&SC measures (i.e., silt fence) will remain in place until the Site is permanently stabilized by the establishment of grass, as applicable.

5. Deviations from Interim Removal Action Work Plan

The NTCRA was conducted in accordance with the IRAWP (ARCADIS, 2013b), with minor exception. Deviations are described in additional detail where appropriate within this report and are listed below for reference purposes:

- Well Construction Materials – Schedule 80 polyvinyl chloride (PVC) well casing was installed at extraction wells EW-1, EW-4, EW-5, and EW-6 and injection wells IW-01 through IW-04. This change was made following the breach of Schedule 40 PVC casing during well construction at EW-1.

- Wetland Impact – Installation of the HC system in the vicinity of EW-2 extended within the 25 – ft wetland buffer area. Restoration in this area was conducted in May and June 2014 in accordance with all applicable local, state, and federal regulations. Following initial disturbance, no additional vehicular traffic or Site grading was conducted in this area. The wetland impact plate depicting the disturbed area is provided in **Appendix H**.

- Schedule – The removal action, as specified in the IRAWP (ARCADIS, 2013b), was anticipated to be conducted over a three-month duration. However, due to weather complications and unforeseen site conditions, the removal action was conducted over a six-month period (September 2013 to March 2014).

- Green and Sustainable Remediation – It was initially thought that solar energy could be harvested to power ancillary devices associated with the HC groundwater treatment system building; however, concerns with respect to efficiency prevented the installation of such infrastructure.

6. Performance Standards and Construction Quality Control

This section discusses the standards used to successfully ensure health and safety and to implement the removal action

6.1 Health and Safety

All field activities performed at the Site were conducted in accordance with the Site Wide Health and Safety Plan (ARCADIS, 2010a) and internal health and safety procedures.

6.2 Construction Quality Control

All sampling was conducted in accordance with the approved Site Wide Sampling and Analysis Plan (SAP; ARCADIS, 2010b) and the Site Wide Quality Assurance Project Plan (QAPP; ARCADIS, 2010c).

Quality assurance (QA) is defined as the overall system for assuring the reliability of data generated. The system provides independent verification that the established quality control (QC) measures are implemented by project participants in a manner that ensures the integrity of the environmental sampling and analysis activities. The Site-Wide QAPP (ARCADIS, 2010c) provides further details on requirements of the QA/QC program. All sampling (e.g., IDW sampling, influent and effluent treatment system samples) was conducted in accordance with the approved SAP (ARCADIS, 2010b) and the Site Wide QAPP (ARCADIS, 2010b).

7. Final Inspection

A final Site inspection was conducted on June 13, 2014, following Site restoration activities with representatives from FGGM and ARCADIS. A photo log documenting the removal actions completed at the Site including Site restoration is provided as **Appendix I**. The following punch list items were noted and promptly addressed following the Site inspection:

- Extension of the down-spout on the gutter system on the HC groundwater treatment system building;
- Installation of an air conditioning unit in the HC groundwater treatment system building to prevent condensation inside the building;
- Installation of additional gravel to fill in potholes on the access road to the HC groundwater treatment system building;
- Installation of the enclosure around the HC groundwater treatment system building;
- Removal of a small pile of gravel located in a grass area off Magazine Road;
- Installation of Best Management Practices (silt fence, straw bales, and extension of the swale) along the access road to IW-3 to prevent erosion and washout;
- Additional seeding along the access road to IW-3; and
- Installation of additional tackifier to cover grass seed applied in the vicinity of EW-2.

8. Site Contact Information

Listed below are the contact persons for this project.

U.S. Environmental Protection Agency
John Burchette
1650 Arch Street
Philadelphia, Pennsylvania 19103-2029
215.814.3378

Maryland Department of the Environment
Elisabeth Green, PhD
Federal Facilities Division
1800 Washington Blvd, Suite 625
Baltimore, MD 21230
410.537.3346.

Directorate of Public Works – Environmental Division
Michael "Mick" Butler – Environmental Division, Chief
2460 Wilson Street and 85th Medical Battalion Avenue
Fort George G. Meade, Maryland 20755-7068
310.677.9188

George Knight – Installation Restoration Program Manager
2460 Wilson Street and 85th Medical Battalion Avenue
Fort George G. Meade, Maryland 20755-7068
301.677.7999

ARCADIS Project Manager
Tim Llewellyn
ARCADIS
1114 Benfield Boulevard, Suite A
Millersville, Maryland 21108
410.987.0032

9. References

ARCADIS U.S., Inc. (ARCADIS). 2010a. Health and Safety Plan for the Performance Based Acquisition at Fort George G. Meade. Final. October 2010.

ARCADIS. 2010b. Final Site Wide Sampling and Analysis Plan, Fort George G. Meade, Maryland. March.

ARCADIS. 2010c. Final Quality Assurance Project Plan, Fort George G. Meade, Maryland. March.

ARCADIS. 2013a. Engineering Evaluation/Cost Analysis for Operable Unit 4, Fort George G. Meade, Maryland. Final. June 2013.

ARCADIS. 2013b. Interim Removal Action Work Plan for Operable Unit 4, Fort George G. Meade, Maryland. Final. December 2013.

ARCADIS. 2014a. First Quarter Operation and Maintenance Report for Operable Unit 4, Fort George G. Meade, Maryland. Final. August 2014.

ARCADIS. 2014b. Interim Removal Action Report for Operable Unit 4 Areas of Concern 1 and 2 (Buildings 2286/2276 and Building 2250), Fort George G. Meade, Maryland. Draft. August 2014.

ARCADIS. 2014c. Remedial Investigation/Feasibility Study for Operable Unit 4, Fort George G. Meade, Maryland. Draft Final. July 2014.

Maryland Department of the Environment. 2011. Standards and Specifications for Soil Erosion and Sediment Control. Water Management Association with the Natural Resources Conservation Service and Maryland Association of Soil Conservation Districts. October.

United States Army. 2013. Action Memorandum for Operable Unit 4, Fort George G. Meade, Maryland. Final. July 2013.

United States Environmental Protection Agency. 2011. Close Out Procedures for National Priority List Sites. Office of Emergency and Remedial Response, Directive 9320.2-22. May 2011.

Tables

Table 1
Well Construction Details
Interim Removal Action Report for OU-4 Area of Concern 3 (Lower Patapsco Aquifer Study Area)
Operable Unit 4, Lower Patapsco Aquifer Study Area
Fort George G. Meade, Maryland

Well ID	Installation Date	Northing	Easting	Ground Surface Elevation (ft msl)	Measuring Point Elevation	Screened Interval (ft bgs)	Screen Length (ft)	Stainless Steel Screen Slot Size (inches)	Casing Diameter (inches)	Well Casing Construction	Bottom of Sump (ft bgs)	Bottom of Pump (ft bgs)
Extraction Wells												
EW-1	7/24/2013	518402.9	1392845.0	151.1	150.23	151 - 201	50	0.02	6	Schedule 80 PVC	206	196
EW-2	7/11/2013	518314.8	1392332.4	137.6 / 135.9	135.11	130 - 180	50	0.02	6	Schedule 40 PVC	185	175
EW-3	7/18/2013 - 7/19/2013	518011.0	1391911.4	141.8	140.17	160 - 210	50	0.02	6	Schedule 40 PVC	215	200
EW-4	8/1/2013 - 8/2/2013	517730.8	1391512.4	165.7	164.35	151 - 201	50	0.02	6	Schedule 80 PVC	206	196
EW-5	8/8/2013	517432.3	1391069.2	150.1	147.38	103 - 153	50	0.02	6	Schedule 80 PVC	158	143
EW-6	7/23/2013	516945.7	1390734.6	128.4	125.84 (cap)	119 - 169	50	0.02	6	Schedule 80 PVC	174	164
Injection Wells												
IW-1	8/15/2013	517633.1	1393655.9	159.9	157.10/157.15 (cap)	116 - 196	80	0.03	6	Schedule 80 PVC	201	-
IW-2	7/31/2013	516727.9	1393448.2	159.8	157.75	126 - 196	70	0.03	6	Schedule 80 PVC	201	-
IW-3	8/7/2013 - 8/8/2013	516377.4	1392246.0	146.3	143.60/143.66 (cap)	81 - 152	71	0.03	6	Schedule 80 PVC	152	-
IW-4	7/25/2013	515507.4	1391153.1	125.3	124.36 (cap A), 124.25 (cap B)	45 - 145	100	0.03	6	Schedule 80 PVC	150	-

Notes:
1. Northing and easting coordinates are relative to the North American Datum (NAD) 83/10, Maryland.
2. Vertical elevations are presented in feet above mean sea level (ft msl) and are relative to the North American Vertical Datum (NAVD) 1988.
ft - feet
ft bgs - feet below ground surface
PVC - polyvinyl chloride

Figures

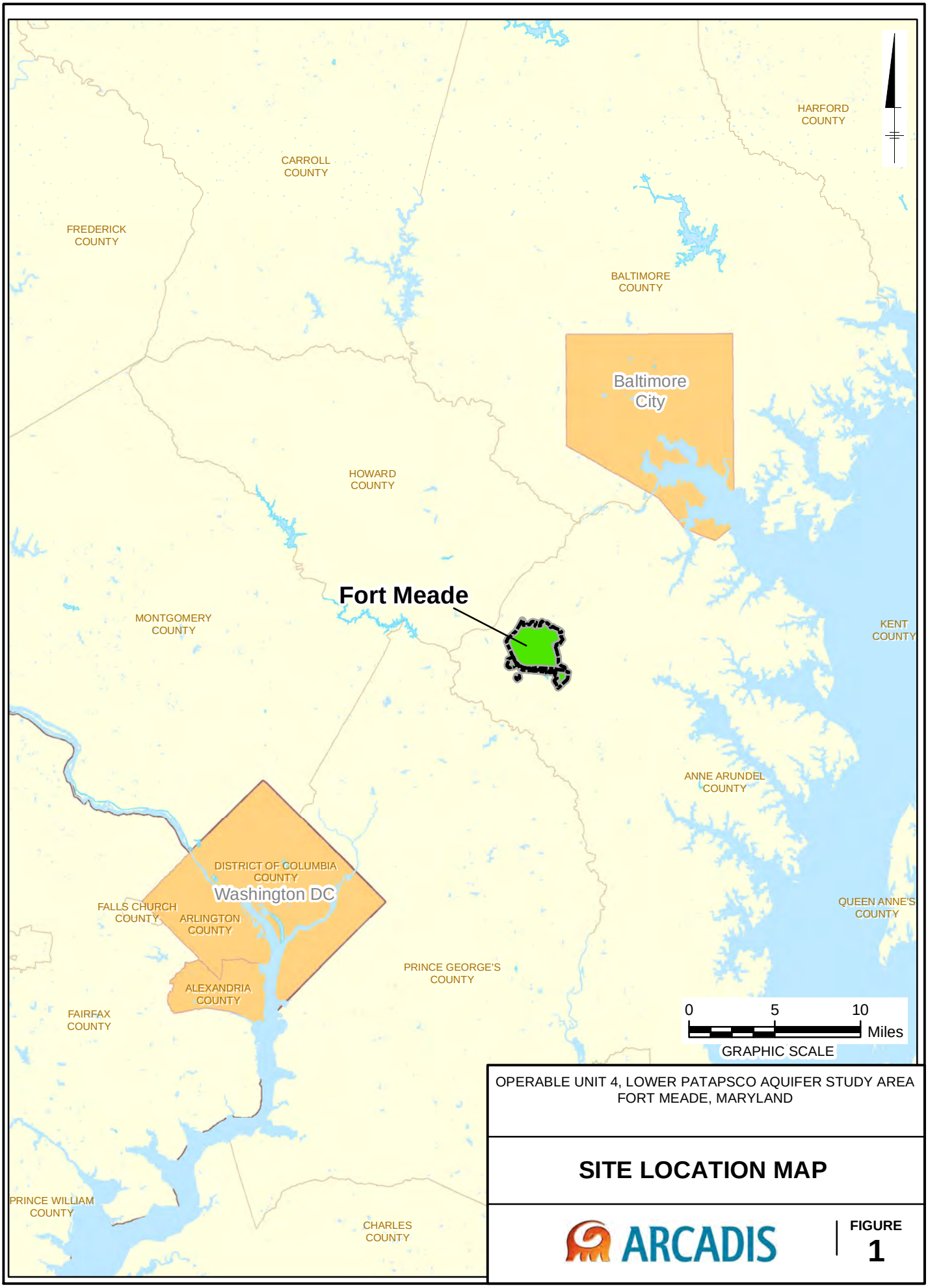

OPERABLE UNIT 4, LOWER PATAPSCO AQUIFER STUDY AREA
FORT MEADE, MARYLAND

SITE LOCATION MAP

ARCADIS

FIGURE
1

CITY: MPLS DIV/GROUP: IM DB: MG
FORT GEORGE G. MEADE
Document Path: G:\GIS\Projects\Fort_Meade\ArcMap\OU4\2014\Site_Location_OU4_20140507.mxd

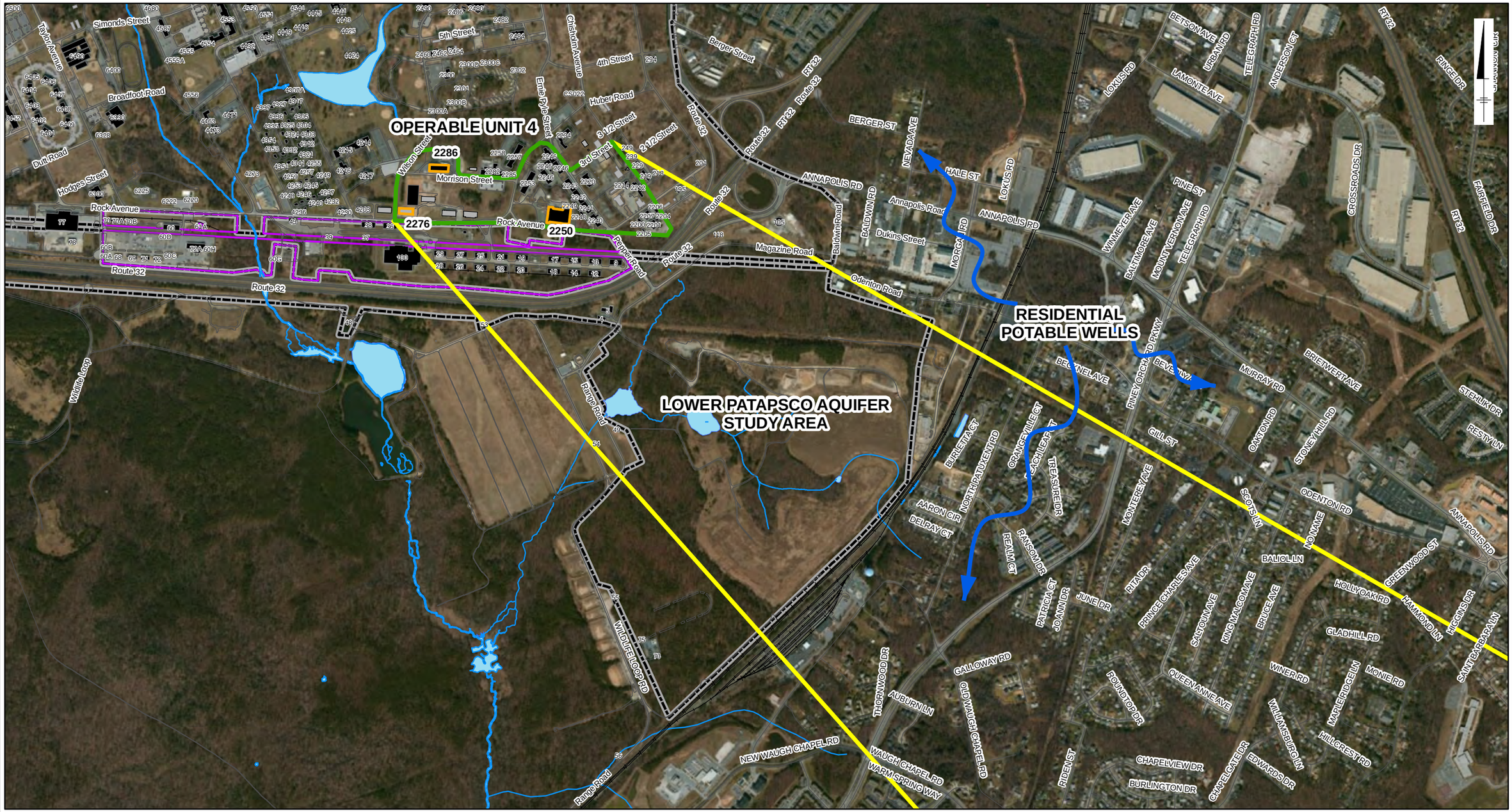

LEGEND:

- ROADS
- RAILROAD
- DEMOLISHED STRUCTURES
- EXISTING STRUCTURES
- AREA OF CONCERN
- STREAM
- SURFACE WATER
- ARCHITECT OF THE CAPITOL PROPERTY BOUNDARY
- INSTALLATION BOUNDARY
- OU4 BOUNDARY
- LOWER PATAPSCO AQUIFER STUDY AREA

NOTE:

11/5/2011 AERIAL IMAGE: ARCGIS BASEMAP IMAGERY SERVICE ACCESSED 5/8/2014.

OPERABLE UNIT 4, LOWER PATAPSCO AQUIFER STUDY AREA
FORT MEADE, MARYLAND

OPERABLE UNIT 4 AND LOWER PATAPSCO AQUIFER STUDY AREA

ARCADIS

FIGURE 2

CITY: MPLS DIV/GROUP: IM DB: MG LD: KS
FORT MEADE
Path: Z:\GISPROJECTS_ENV\Fort_Meade\ArcMap\OU4\2014\2014-07\OU4_LPA_Study_Area_20140710.mxd

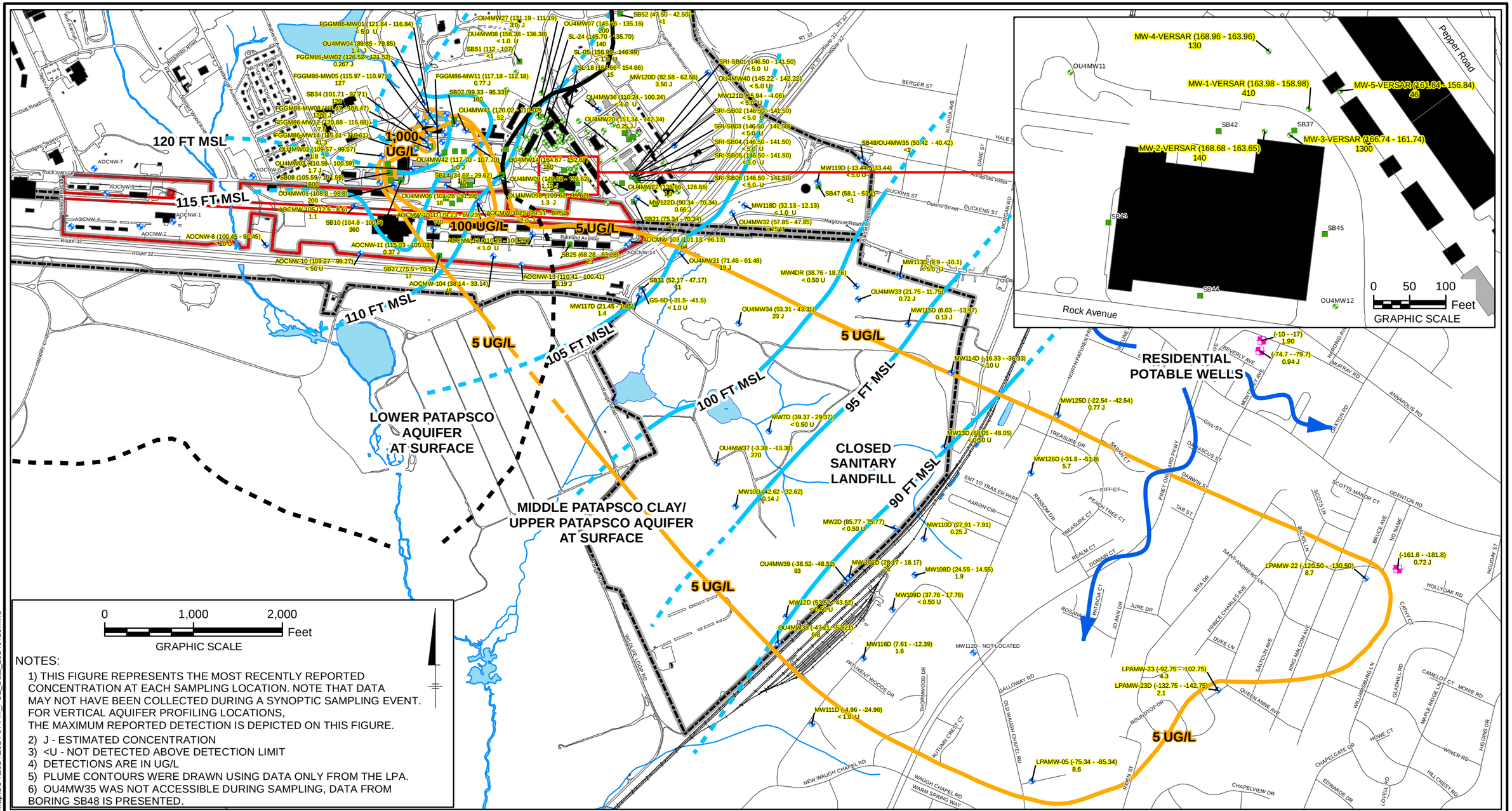

NOTES:

1) THIS FIGURE REPRESENTS THE MOST RECENTLY REPORTED CONCENTRATION AT EACH SAMPLING LOCATION. NOTE THAT DATA MAY NOT HAVE BEEN COLLECTED DURING A SYNOPTIC SAMPLING EVENT. FOR VERTICAL AQUIFER PROFILING LOCATIONS, THE MAXIMUM REPORTED DETECTION IS DEPICTED ON THIS FIGURE.
2) J - ESTIMATED CONCENTRATION
3) <U - NOT DETECTED ABOVE DETECTION LIMIT
4) DETECTIONS ARE IN UG/L
5) PLUME CONTOURS WERE DRAWN USING DATA ONLY FROM THE LPA.
6) OU4MW35 WAS NOT ACCESSIBLE DURING SAMPLING, DATA FROM BORING SB48 IS PRESENTED.

LEGEND:

- MIDDLE PATAPSCO AQUIFER WELL (163.98 - 158.98) MONITORING WELL SCREEN INTERVAL (FEET MEAN SEA LEVEL) 41.3 - PCE DETECTION
- LOWER PATAPSCO AQUIFER WELL (21.45 - 1.45) MONITORING WELL SCREEN INTERVAL (FEET MEAN SEA LEVEL) 2400 - PCE DETECTION
- BORING LOCATION (42.62 - 32.62) VERTICAL INTERVAL FROM WHICH DATA WERE COLLECTED (FEET MEAN SEA LEVEL)
- RESIDENTIAL WELL
- ROADS
- RAILROAD
- DEMOLISHED STRUCTURES
- EXISTING STRUCTURES
- STREAM
- SURFACE WATER
- AOC PROPERTY BOUNDARY
- INSTALLATION BOUNDARY
- MID-PATAPSCO CLAY CONTACT DASHED WHERE INFERRED
- LPA PCE CONTOUR (UG/L)
- LPA GROUNDWATER ELEVATION CONTOUR DASHED WHERE INFERRED
- WATER LEVEL CONTOUR DATA COLLECTED 2/2013

OPERABLE UNIT 4
FORT MEADE, MARYLAND

OPERABLE UNIT 4
LOWER PATAPSCO AQUIFER STUDY AREA
PCE DETECTIONS IN THE MIDDLE AND LOWER PATAPSCO AQUIFER

ARCADIS

FIGURE
3

CITY: MPLS DIV/GROUP: IM DB: MG LD: KS
FORT MEADE
Path: Z:\GISPROJECTS_ENV\Fort_Meade\ArcMap\OU4\2014\2014-07\FM_PCE_Data_20140710.mxd

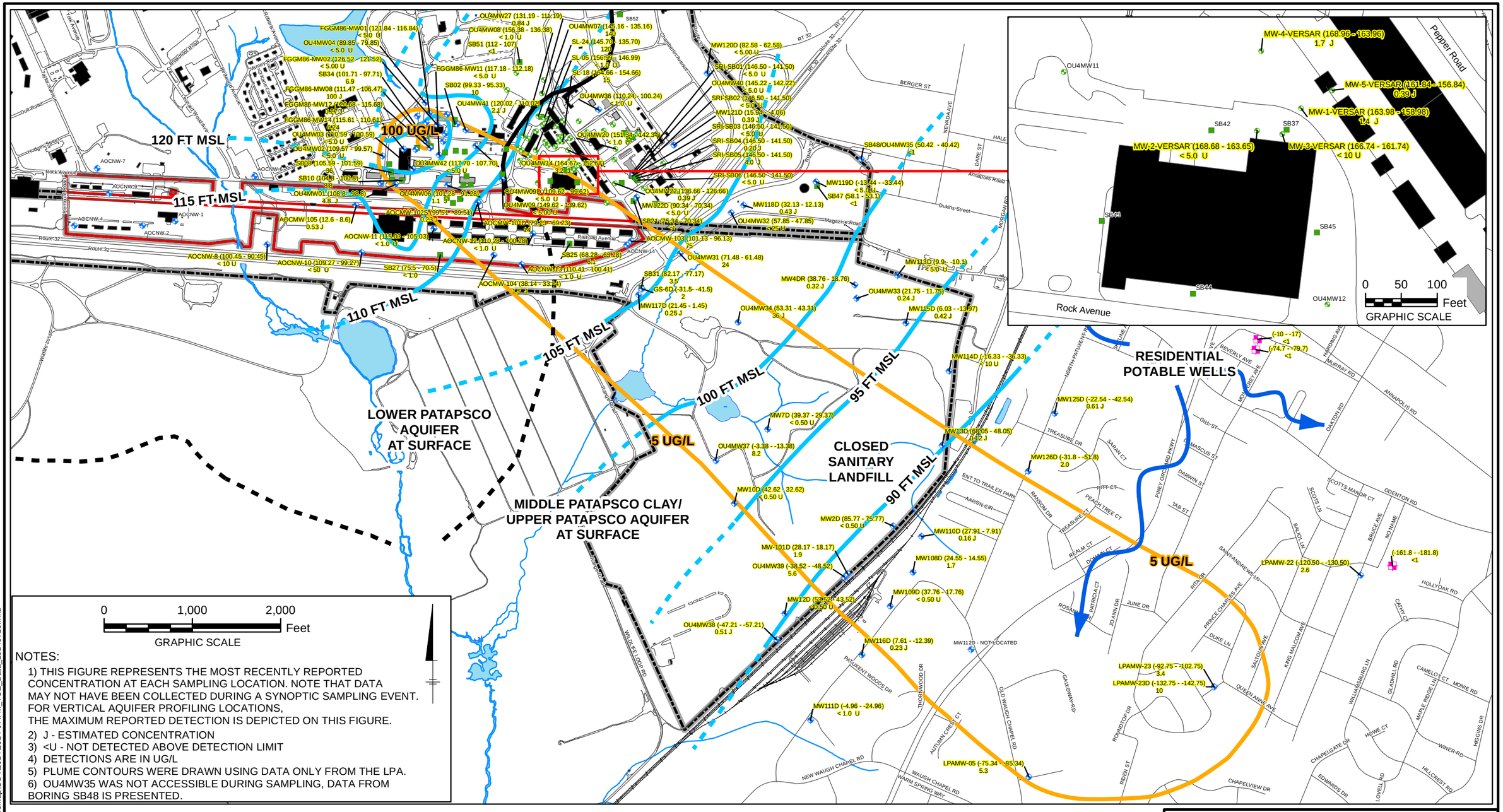

NOTES:

1) THIS FIGURE REPRESENTS THE MOST RECENTLY REPORTED CONCENTRATION AT EACH SAMPLING LOCATION. NOTE THAT DATA MAY NOT HAVE BEEN COLLECTED DURING A SYNOPTIC SAMPLING EVENT. FOR VERTICAL AQUIFER PROFILING LOCATIONS, THE MAXIMUM REPORTED DETECTION IS DEPICTED ON THIS FIGURE.
2) J - ESTIMATED CONCENTRATION
3) <U - NOT DETECTED ABOVE DETECTION LIMIT
4) DETECTIONS ARE IN UG/L
5) PLUME CONTOURS WERE DRAWN USING DATA ONLY FROM THE LPA.
6) OU4MW35 WAS NOT ACCESSIBLE DURING SAMPLING, DATA FROM BORING SB48 IS PRESENTED.

LEGEND:

- MIDDLE PATAPSCO AQUIFER WELL (163.98 - 158.98) MONITORING WELL SCREEN INTERVAL (FEET MEAN SEA LEVEL) 41.3 - TCE DETECTION
- LOWER PATAPSCO AQUIFER WELL (21.45 - 1.45) MONITORING WELL SCREEN INTERVAL (FEET MEAN SEA LEVEL) 2400 - TCE DETECTION
- BORING LOCATION (42.62 - 32.62) VERTICAL INTERVAL FROM WHICH DATA WERE COLLECTED (FEET MEAN SEA LEVEL)
- RESIDENTIAL WELL
- ROADS
- RAILROAD
- DEMOLISHED STRUCTURES
- EXISTING STRUCTURES
- STREAM
- SURFACE WATER
- AOC PROPERTY BOUNDARY
- INSTALLATION BOUNDARY
- MID-PATAPSCO CLAY CONTACT DASHED WHERE INFERRED
- LPA TCE CONTOUR (UG/L)
- LPA GROUNDWATER ELEVATION CONTOUR DASHED WHERE INFERRED
- WATER LEVEL CONTOUR DATA COLLECTED 2/2013

OPERABLE UNIT 4
FORT MEADE, MARYLAND

OPERABLE UNIT 4
LOWER PATAPSCO AQUIFER STUDY AREA
TCE DETECTIONS IN THE MIDDLE AND LOWER PATAPSCO AQUIFER

ARCADIS

FIGURE
4

CITY: MPLS DIV/GROUP: IM DB: MG LD: KS
FORT MEADE
Path: Z:\GISPROJECTS_ENV\Fort_Meade\ArcMap\OU4\2014\2014-07\FM_TCE_Data_20140710.mxd

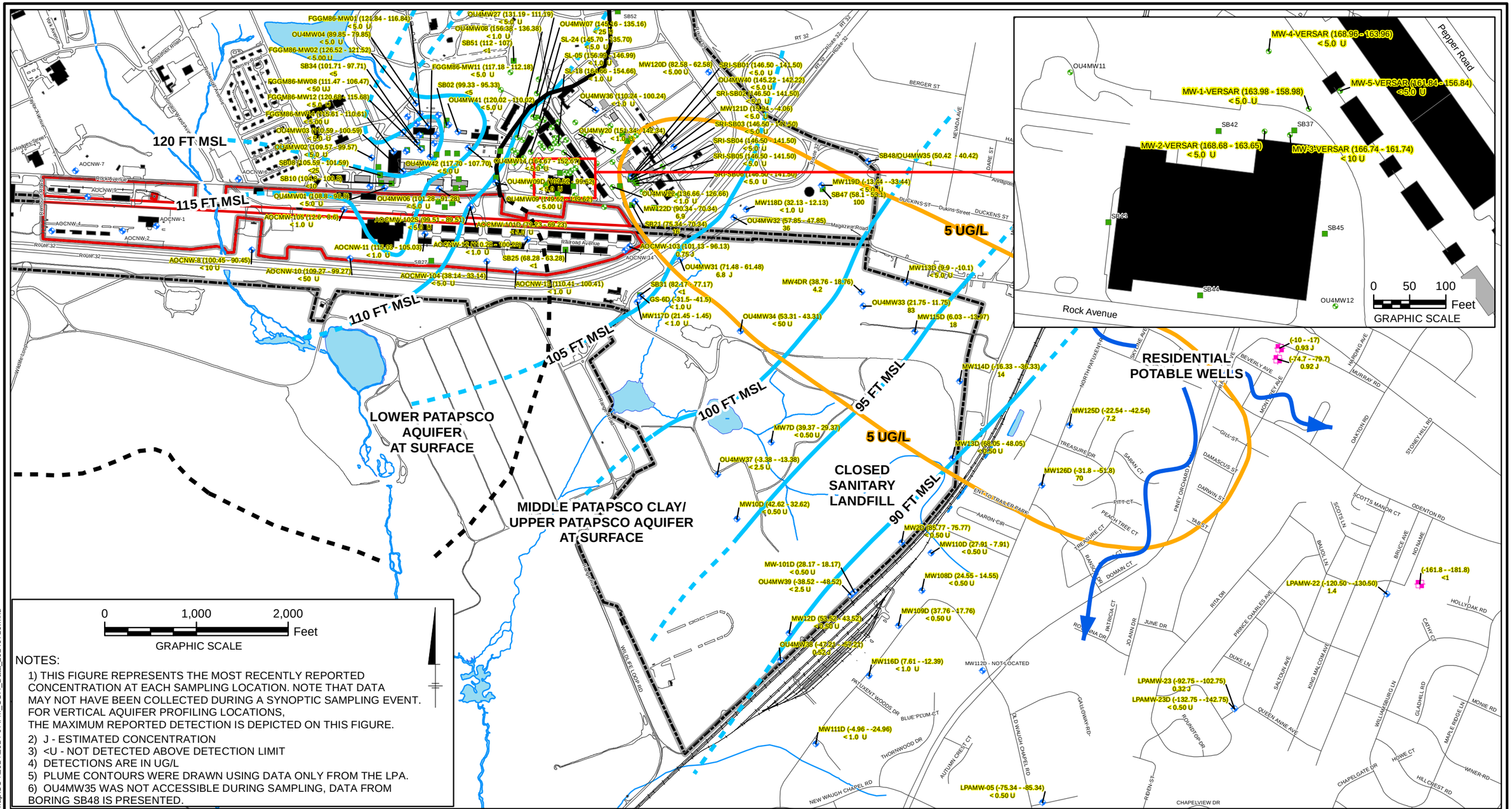

NOTES:

1) THIS FIGURE REPRESENTS THE MOST RECENTLY REPORTED CONCENTRATION AT EACH SAMPLING LOCATION. NOTE THAT DATA MAY NOT HAVE BEEN COLLECTED DURING A SYNOPTIC SAMPLING EVENT. FOR VERTICAL AQUIFER PROFILING LOCATIONS, THE MAXIMUM REPORTED DETECTION IS DEPICTED ON THIS FIGURE.
2) J - ESTIMATED CONCENTRATION
3) <U - NOT DETECTED ABOVE DETECTION LIMIT
4) DETECTIONS ARE IN UG/L
5) PLUME CONTOURS WERE DRAWN USING DATA ONLY FROM THE LPA.
6) OU4MW35 WAS NOT ACCESSIBLE DURING SAMPLING, DATA FROM BORING SB48 IS PRESENTED.

LEGEND:

- MIDDLE PATAPSCO AQUIFER WELL (163.98 - 158.98) MONITORING WELL SCREEN INTERVAL (FEET MEAN SEA LEVEL) 41.3 - CCI4 DETECTION
- LOWER PATAPSCO AQUIFER WELL (21.45 - 1.45) MONITORING WELL SCREEN INTERVAL (FEET MEAN SEA LEVEL) 2400 - CCI4 DETECTION
- BORING LOCATION (42.62 - 32.62) VERTICAL INTERVAL FROM WHICH DATA WERE COLLECTED (FEET MEAN SEA LEVEL)
- RESIDENTIAL WELL
- ROADS
- RAILROAD
- DEMOLISHED STRUCTURES
- EXISTING STRUCTURES
- STREAM
- SURFACE WATER
- AOC PROPERTY BOUNDARY
- INSTALLATION BOUNDARY
- MID-PATAPSCO CLAY CONTACT DASHED WHERE INFERRED
- LPA CCI4 CONTOUR (UG/L)
- LPA GROUNDWATER ELEVATION CONTOUR DASHED WHERE INFERRED
- WATER LEVEL CONTOUR DATA COLLECTED 2/2013

OPERABLE UNIT 4
FORT MEADE, MARYLAND

OPERABLE UNIT 4
LOWER PATAPSCO AQUIFER STUDY AREA
CCI4 DETECTIONS IN THE MIDDLE AND LOWER PATAPSCO AQUIFER

ARCADIS

FIGURE
5

CITY: MPLS DIV/GROUP: IM DB: MG LD: KS
FORT MEADE
Path: Z:\GISPROJECTS_ENV\Fort_Meade\ArcMap\OU4\2014\2014-07\FM_CCI4_Data_20140710.mxd

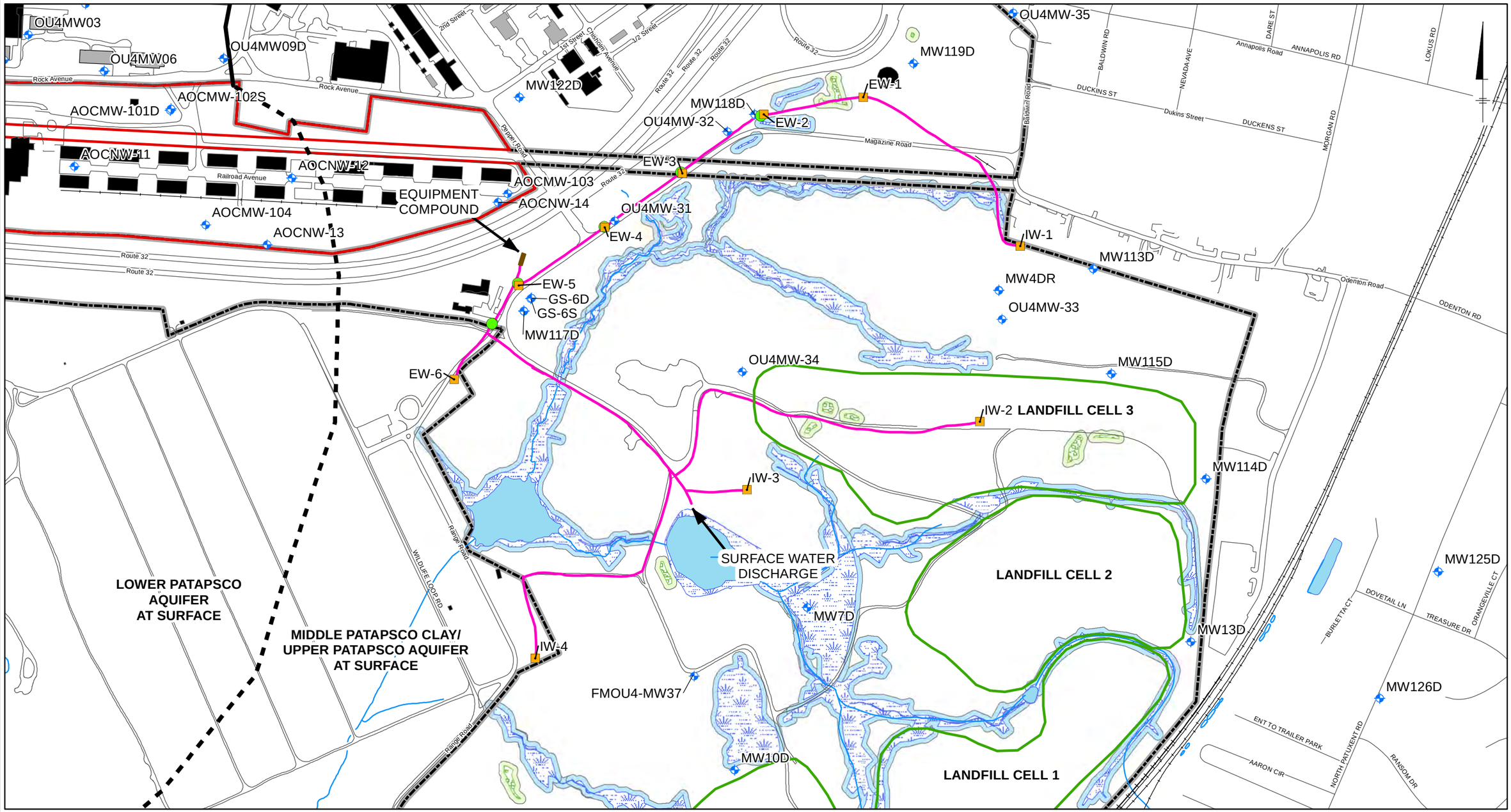

LEGEND:

- FINAL LPA WELL LOCATION
- LOWER PATAPSCO AQUIFER WELL
- PIPE CLEANOUT LOCATION
- SUBSURFACE PIPING
- DEMOLISHED STRUCTURES
- EXISTING STRUCTURES
- ROADS
- RAILROAD
- STREAM
- SURFACE WATER
- ARCHITECT OF THE CAPITOL PROPERTY BOUNDARY
- INSTALLATION BOUNDARY
- LANDFILL CELL BOUNDARY
- MID-PATAPSCO CLAY CONTACT DASHED WHERE INFERRED
- ISOLATED WETLAND (MDE)
- ISOLATED WETLAND BOUNDARY (25 FT MDE)
- JURISDICTIONAL WETLANDS & WATERS OF THE UNITED STATES
- CZM RIPARIAN & WETLAND BUFFER (25 FT)

0 500 1,000 Feet
GRAPHIC SCALE

OPERABLE UNIT 4, LOWER PATAPSCO AQUIFER STUDY AREA
FORT MEADE, MARYLAND

LOWER PATAPSCO AQUIFER STUDY AREA HYDRAULIC CONTAINMENT SYSTEM LAYOUT

ARCADIS

FIGURE
6

CITY: MPLS DIV/GROUP: IM DB: MG LD: KS
FORT MEADE
Path: Z:\GISPROJECTS_ENV\Fort_Meade\ArcMap\OU4\2014\2014-07\LPA_Hyd_Sys_Layout_20140710.mxd

Appendix A

Survey Report (Provided on CD)

Exhibit A-2
Survey Report

SURVEY REPORT

LOCATION: Fort Meade MD. **DATE:** 14 April 2014

SITE: OU-4 / Lower Patapsco Aquifer Well Locations

SURVEYOR: C. Allen Paugh,

KCI Technologies Inc. 11850 West Market Place Fulton Md. 20759

SURVEY DATUMS:

Horizontal Coordinates: NAD 83/10, Maryland, US Feet

Vertical Elevations: NAVD 1988, US Feet

SOFTWARE: None - Field Run from NGS Bench Marks and NSA #7

SURVEY DATA:

STATE OF MARYLAND
CARROLL ALLEN PAUGH
No. 473
REGISTERED
PROPERTY LINE SURVEYOR

C. Allen Paugh
4/14/14

Northing	Easting	Measuring Point Elevation	Ground Elevation	Location ID	MH Lid Elevation
518402.9	1392845.0	150.23	151.1	EW1	151.15
518314.8	1392332.4	135.11	137.6 / 135.9	EW2	137.65
518011.0	1391911.4	140.17	141.8	EW3	141.81
517730.8	1391512.4	164.35	165.7	EW4	165.75
517432.3	1391069.2	147.38	150.1	EW5	150.17
516945.7	1390734.6	125.84 cap	128.4	EW6	128.42

Exhibit A-2
Survey Report

517633.1	1393655.9	157.10 157.15 cap	159.9	IW1 IW1	159.89
516727.9	1393448.2	157.75	159.8	IW2	160.52
516377.4	1392246.0	143.60 143.66 cap	146.3	IW3 IW3	146.36
515507.4	1391153.1	124.36 cap a 124.25 cap b	125.3	IW4 IW4	125.32

NOTE: (1) The following NGS control points have been used for this survey:

AC7770	83/10 N 493540.73	83/10 E 1361533.04	Elev. 158.46
DF6306	83/10 N 579231.64	83/10 E 1394022.02	Elev. 323.06
DK7738	83/10 N 489649.46	83/10 E 1423411.99	Elev. 183.48
JV1379			Elev. 162.62
NSA#7			Elev. 156.89

(2) Measure point is the lip of the pvc pipe unless noted as "cap".

(3) Note the ground at EW2 is mounded at the well.

(4) The field crew was unable to remove the cap on some of the pvc pipes which have been noted as "cap" in the report above.

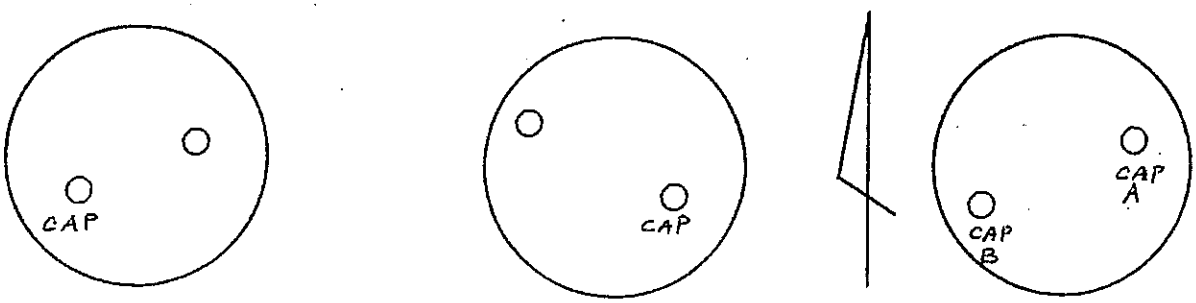

IW1 IW3 IW4

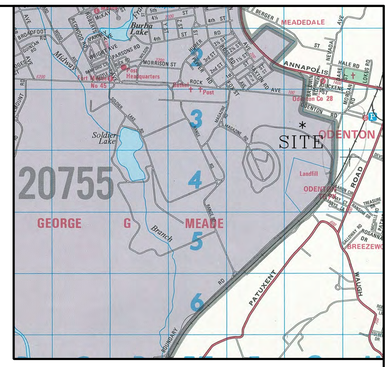

VICINITY MAP

LEGEND

- WATER LINE
- WATER LINE
- RAIL ROAD TRACK
- WOODS LINE
- STORM DRAIN LINE
- OVER HANG WIRE
- FENCE LINE
- UTILITY POLE
- MONITORING WELL
- WATER VALVE
- CLEAN OUT

NOTES:

1. THE INFORMATION SHOWN HEREON IS BASED ON AN AERIAL MAPPING SURVEY BY VIRGINIA RESOURCE MAPPING IN MAY OF 2013. NO FIELD VERIFICATION WAS DONE. TWO SMALL STRIPS OF FIELD RUN TOPOGRAPHY WERE PERFORMED BY KCI TECHNOLOGIES, INC. AT IW-1 NORTHERLY TO THE ROAD AND IW-4 EASTERLY TO THE ROAD.
2. THE DATUM FOR THE SURVEY IS BASED ON THE MARYLAND COORDINATE SYSTEM NAD 83/2007 FOR HORIZONTAL AND THE VERTICAL DATUM IS NAVD 1988 FROM NSA AND NGS MONUMENTS.
3. THE SURVEY WAS COMPLETED FOR ARCADIS USA.
4. NO PROPERTY LINE DATA WAS REQUESTED.
5. ANY AREA SHOWN ON THE MAP THAT IS LABELED •DENSE TREES• WILL NOT BE WITHIN NATIONAL MAP ACCURACY STANDARDS. NO FIELD VERIFICATION WAS DONE IN THESE AREAS AS REQUESTED BY ARCADIS. THESE AREAS ARE •USE AT YOUR OWN RISK•.
6. AS-BUILT LOCATIONS WERE COMPLETED IN MARCH 2014.
7. WATER LINE SHOWN THUS: —W— BY TRENCH LOCATIONS.
8. WATER LINE SHOWN THUS: --W--W-- NO ABOVE GROUND TRENCH, POSITION ESTIMATED.
9. TIE DISTANCES SHOWN TO THE LINE ARE APPROXIMATE.
10. THE CAP COULD NOT BE REMOVED FROM SOME PVC PIPES. THESE ARE NOTED AS "CAP" ON THIS PLAN.

GRAPHIC SCALE

30 0 15 30 60

(IN FEET)
1 inch = 30ft.

KCI TECHNOLOGIES
ENGINEERS
PLANNERS
SCIENTISTS
CONSTRUCTION MANAGERS
936 RIDGEBROOK ROAD
SPARKS, MARYLAND 21152
TELEPHONE: (410) 316-7800
FAX: (410) 316-7818

REVISIONS

NO.	DATE	DESCRIPTION	BY
1	4/11/14	ADDED ADDITION LOCATIONS	K.N.T.

DATE: MAY 28, 2013
SCALE: 1" = 30'
DESIGNED BY:
DRAWN BY: K.N.T.

FORT MEADE
PIPE LINE TOPOGRAPHY
AS-BUILT
FORT MEADE, MARYLAND

DRAWING NO.
SHEET 1 OF 8
KCI JOB NUMBER 29-100497.12

PLOTTED: "11:14 AM on Tuesday, April 15, 2014"
BY: Kimberly Taylor Division: P092 Survey Emc
FILE: M:\2029\29100497.12\Field\Plats\ 2014\MeadeSheet1.dgn

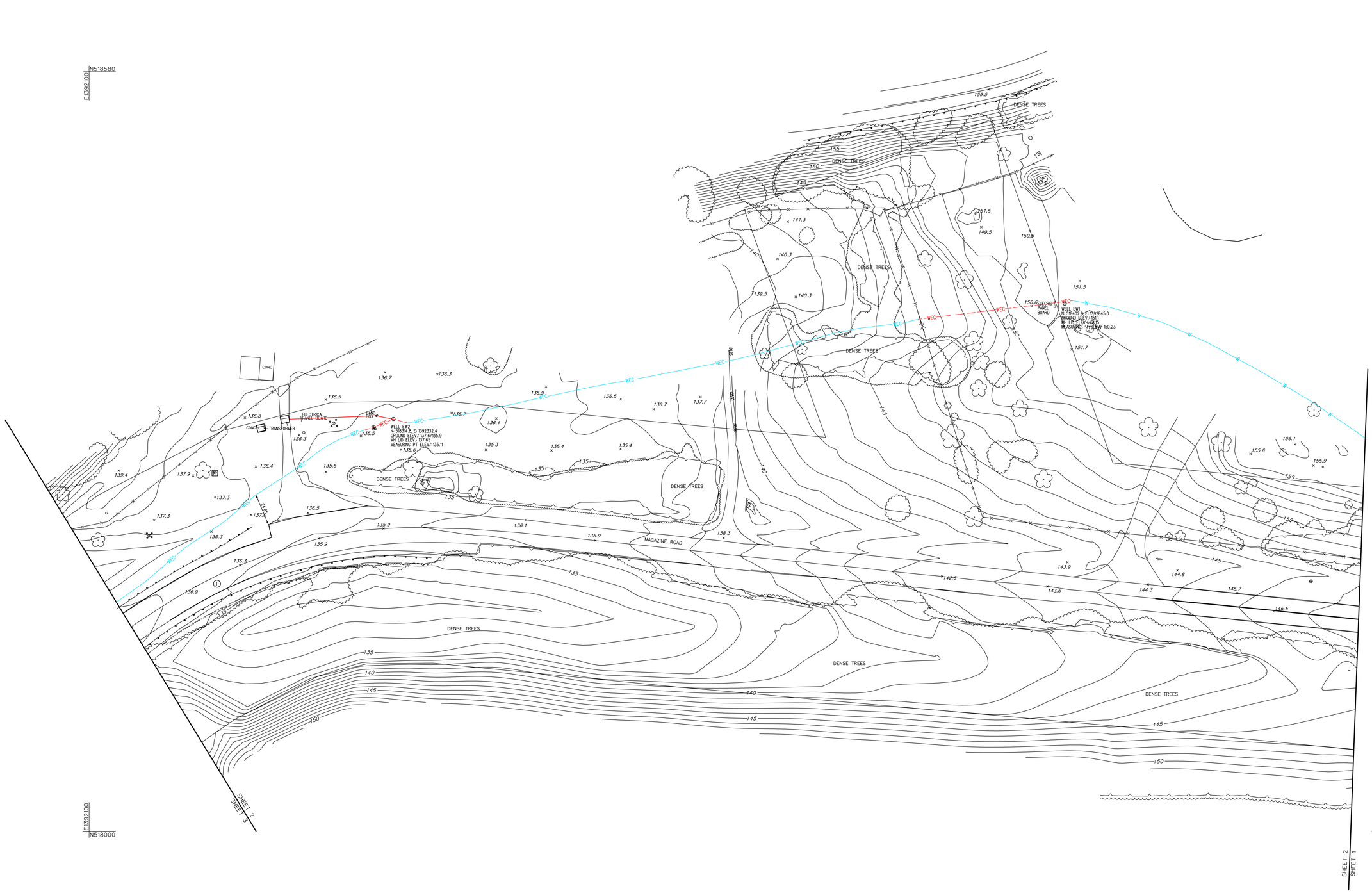

LEGEND

- WATER, ELECTRIC, COMMUNICATION LINE
- WATER, ELECTRIC, COMMUNICATION LINE
- RAIL ROAD TRACK
- WOODS LINE
- STORM DRAIN LINE
- OVER HANG WIRE
- FENCE LINE
- UTILITY POLE
- MONITORING WELL
- WATER VALVE
- CLEAN OUT
- ELECTRICAL LINE (appx)

NOTES:

1. THE INFORMATION SHOWN HEREON IS BASED ON AN AERIAL MAPPING SURVEY BY VIRGINIA RESOURCE MAPPING IN MAY OF 2013. NO FIELD VERIFICATION WAS DONE. TWO SMALL STRIPS OF FIELD RUN TOPOGRAPHY WERE PERFORMED BY KCI TECHNOLOGIES, INC. AT IW-1 NORTHERLY TO THE ROAD AND IW-4 EASTERLY TO THE ROAD.
2. THE DATUM FOR THE SURVEY IS BASED ON THE MARYLAND COORDINATE SYSTEM NAD 83/2007 FOR HORIZONTAL AND THE VERTICAL DATUM IS NAVD 1988 FROM NSA AND NGS MONUMENTS.
3. THE SURVEY WAS COMPLETED FOR ARCADIS USA.
4. NO PROPERTY LINE DATA WAS REQUESTED.
5. ANY AREA SHOWN ON THE MAP THAT IS LABELED •DENSE TREES• WILL NOT BE WITHIN NATIONAL MAP ACCURACY STANDARDS. NO FIELD VERIFICATION WAS DONE IN THESE AREAS AS REQUESTED BY ARCADIS. THESE AREAS ARE •USE AT YOUR OWN RISK•.
6. AS-BUILT LOCATIONS WERE COMPLETED IN MARCH 2014.
7. WATER LINE SHOWN THUS: — WEC — BY TRENCH LOCATIONS.
8. WATER LINE SHOWN THUS: - - WEC - - - - NO ABOVE GROUND TRENCH, POSITION ESTIMATED.
9. TIE DISTANCES SHOWN TO THE LINE ARE APPROXIMATE.
10. THE CAP COULD NOT BE REMOVED FROM SOME PVC PIPES. THESE ARE NOTED AS "CAP" ON THIS PLAN.

GRAPHIC SCALE

30 0 15 30 60

(IN FEET)
1 inch = 30ft.

KCI TECHNOLOGIES
ENGINEERS
PLANNERS
SCIENTISTS
CONSTRUCTION MANAGERS
936 RIDGEBROOK ROAD
SPARKS, MARYLAND 21152
TELEPHONE: (410) 316-7800
FAX: (410) 316-7818

REVISIONS

NO.	DATE	DESCRIPTION	BY
2	7-16-14	ADDRESSED COMMENTS	K.N.T.
1	4-11-14	ADDED ADDITIONAL LOCATIONS	K.N.T.

DATE: MAY 28, 2013
SCALE: 1" = 30'
DESIGNED BY:
DRAWN BY: K.N.T.

FORT MEADE
PIPE LINE TOPOGRAPHY
AS-BUILT
FORT MEADE, MARYLAND

DRAWING NO.
SHEET 2 OF 8
KCI JOB NUMBER 29-100497.12

PLOTTED: "08:44 AM on Thursday, July 17, 2014"
BY: Kimberly Taylor Division: F092 Survey Eng.
FILE: M:\2009\29005497\29-100497.13\MeadeSheet2.dgn

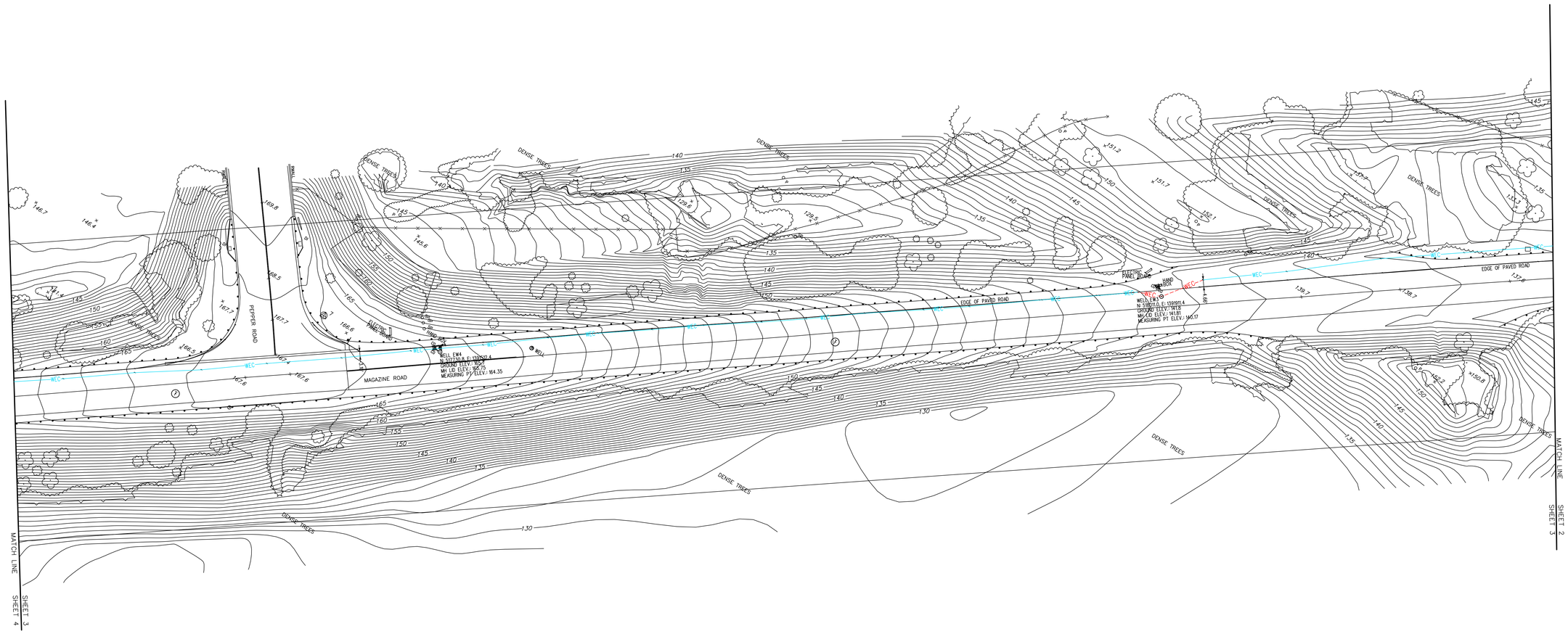

LEGEND

—WEC—	WATER, ELECTRIC, COMMUNICATION LINE
—WEC—	WATER, ELECTRIC, COMMUNICATION LINE
	RAIL ROAD TRACK
	WOODS LINE
—SD—	STORM DRAIN LINE
—OH—	OVER HANG WIRE
—x—	FENCE LINE
	UTILITY POLE
WELL	MONITORING WELL
	WATER VALVE
CO	CLEAN OUT

NOTES:
1. THE INFORMATION SHOWN HEREON IS BASED ON AN AERIAL MAPPING SURVEY BY VIRGINIA RESOURCE MAPPING IN MAY OF 2013. NO FIELD VERIFICATION WAS DONE. TWO SMALL STRIPS OF FIELD RUN TOPOGRAPHY WERE PERFORMED BY KCI TECHNOLOGIES, INC. AT IW-1 NORTHERLY TO THE ROAD AND IW-4 EASTERLY TO THE ROAD.
2. THE DATUM FOR THE SURVEY IS BASED ON THE MARYLAND COORDINATE SYSTEM NAD 83/2007 FOR HORIZONTAL AND THE VERTICAL DATUM IS NAVD 1988 FROM NSA AND NGS MONUMENTS.
3. THE SURVEY WAS COMPLETED FOR ARCADIS USA.
4. NO PROPERTY LINE DATA WAS REQUESTED.
5. ANY AREA SHOWN ON THE MAP THAT IS LABELED •DENSE TREES• WILL NOT BE WITHIN NATIONAL MAP ACCURACY STANDARDS. NO FIELD VERIFICATION WAS DONE IN THESE AREAS AS REQUESTED BY ARCADIS. THESE AREAS ARE •USE AT YOUR OWN RISK•.
6. AS-BUILT LOCATIONS WERE COMPLETED IN MARCH 2014.
7. WATER LINE SHOWN THUS: —WEC— BY TRENCH LOCATIONS.
8. WATER LINE SHOWN THUS: — WEC— NO ABOVE GROUND TRENCH, POSITION ESTIMATED.
9. TIE DISTANCES SHOWN TO THE LINE ARE APPROXIMATE.
10. THE CAP COULD NOT BE REMOVED FROM SOME PVC PIPES. THESE ARE NOTED AS "CAP" ON THIS PLAN.

GRAPHIC SCALE
30 0 15 30 60
(IN FEET)
1 inch = 30ft.

KCI TECHNOLOGIES
Engineers
Planners
Scientists
Construction Managers
936 Ridgebrook Road
Sparks, Maryland 21152
Telephone: (410) 316-7800
Fax: (410) 316-7818

REVISIONS

NO.	DATE	DESCRIPTION	BY
2	7-16-14	ADDRESSED COMMENTS	K.N.T.
1	4-11-14	ADDITIONAL LOCATIONS	K.N.T.

DATE: MAY 28, 2013
SCALE: 1" = 30'
DESIGNED BY:
DRAWN BY: K.N.T.

FORT MEADE
PIPE LINE TOPOGRAPHY
AS-BUILT
FORT MEADE, MARYLAND

DRAWING NO.
SHEET 3 OF 8
KCI JOB NUMBER 29-100497.12

PLOTTED:"12:05 PM on Wednesday, July 16, 2014"
BY:Kimberly Taylor Division: P1932 Survey, Eng
FILE:M:\2029\29\00497\CAD\SURVEY\APRIL 2014\MeadeSheet3.dgn

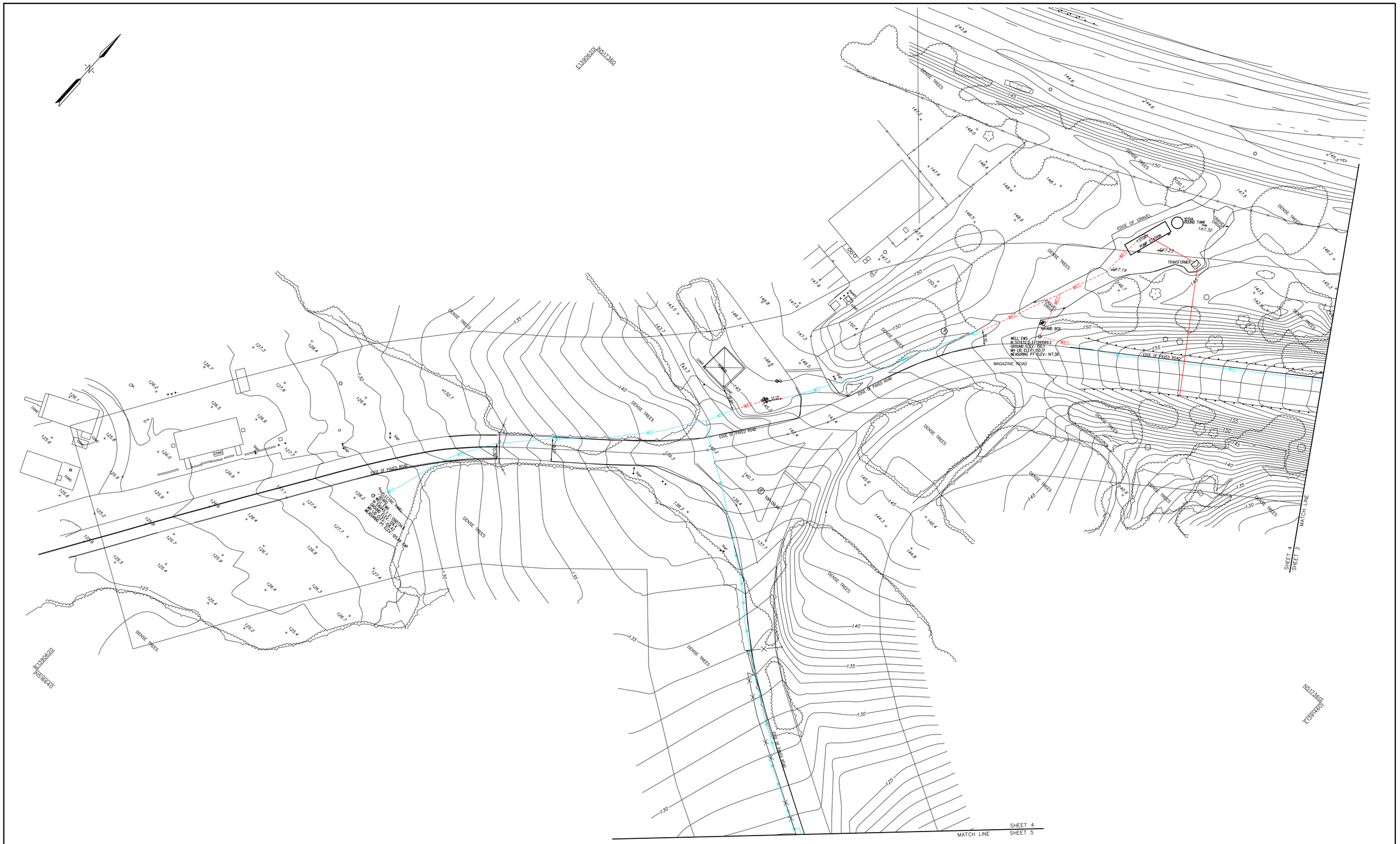

LEGEND

—WEC—	WATER, ELEGTRIC, COMMUNICATION LINE
—WEC—	WATER, ELEGTRIC, COMMUNICATION LINE
-------	RAIL ROAD TRACK
	WOODS LINE
—SD—	STORM DRAIN LINE
—OH—	OVER HANG WIRE
—x—	FENCE LINE
	UTILITY POLE
WELL	MONITORING WELL
	WATER VALVE
CO	CLEAN OUT
	ELECTRICAL LINE (appx)

NOTES:

1. THE INFORMATION SHOWN HEREON IS BASED ON AN AERIAL MAPPING SURVEY BY VIRGINIA RESOURCE MAPPING IN MAY OF 2013. NO FIELD VERIFICATION WAS DONE. TWO SMALL STRIPS OF FIELD RUN TOPOGRAPHY WERE PERFORMED BY KCI TECHNOLOGIES, INC. AT IW-1 NORTHERLY TO THE ROAD AND IW-4 EASTERLY TO THE ROAD.
2. THE DATUM FOR THE SURVEY IS BASED ON THE MARYLAND COORDINATE SYSTEM NAD 83/2007 FOR HORIZONTAL AND THE VERTICAL DATUM IS NAVD 1988 FROM NSA AND NGS MONUMENTS.
3. THE SURVEY WAS COMPLETED FOR ARCADIS USA.
4. NO PROPERTY LINE DATA WAS REQUESTED.
5. ANY AREA SHOWN ON THE MAP THAT IS LABELED •DENSE TREES• WILL NOT BE WITHIN NATIONAL MAP ACCURACY STANDARDS. NO FIELD VERIFICATION WAS DONE IN THESE AREAS AS REQUESTED BY ARCADIS. THESE AREAS ARE •USE AT YOUR OWN RISK•.
6. AS-BUILT LOCATIONS WERE COMPLETED IN MARCH 2014.
7. WATER LINE SHOWN THUS: —WEC— BY TRENCH LOCATIONS.
8. WATER LINE SHOWN THUS: —WEC— NO ABOVE GROUND TRENCH, POSITION ESTIMATED.
9. TIE DISTANCES SHOWN TO THE LINE ARE APPROXIMATE.
10. THE CAP COULD NOT BE REMOVED FROM SOME PVC PIPES. THESE ARE NOTED AS "CAP" ON THIS PLAN.

GRAPHIC SCALE

30 0 15 30 60

(IN FEET)
1 inch = 30ft.

KCI TECHNOLOGIES
ENGINEERS
PLANNERS
SCIENTISTS
CONSTRUCTION MANAGERS
936 RIDGEBROOK ROAD
SPARKS, MARYLAND 21152
TELEPHONE: (410) 316-7800
FAX: (410) 316-7818

REVISIONS

NO.	DATE	DESCRIPTION	BY
2	7-16-14	ADDRESSED COMMENTS	K.N.T.
1	4-11-14	ADDITIONAL LOCATIONS	K.N.T.

DATE: MAY 28, 2013
SCALE: 1" = 30'
DESIGNED BY:
DRAWN BY: K.N.T.

FORT MEADE
PIPE LINE TOPOGRAPHY
AS-BUILT
FORT MEADE, MARYLAND

DRAWING NO.
SHEET 4 OF 8
KCI JOB NUMBER 29-100497.12

PLOTTED: "12:06 PM on Wednesday, July 16, 2014"
BY: Kimberly Taylor Division: P092 Survey Exp
FILE: M:\2009\29100497\29-Meade\Mis_2014\MeadeSheet4.dgn

LEGEND

- SIGN
- WATER LINE
- WATER LINE
- RAIL ROAD TRACK
- WOODS LINE
- STORM DRAIN LINE
- OVER HANG WIRE
- FENCE LINE
- UTILITY POLE
- WELL MONITORING WELL
- WATER VALVE
- CO CLEAN OUT

NOTES:

1. THE INFORMATION SHOWN HEREON IS BASED ON AN AERIAL MAPPING SURVEY BY VIRGINIA RESOURCE MAPPING IN MAY OF 2013. NO FIELD VERIFICATION WAS DONE. TWO SMALL STRIPS OF FIELD RUN TOPOGRAPHY WERE PERFORMED BY KCI TECHNOLOGIES, INC. AT IW-1 NORTHERLY TO THE ROAD AND IW-4 EASTERLY TO THE ROAD.
2. THE DATUM FOR THE SURVEY IS BASED ON THE MARYLAND COORDINATE SYSTEM NAD 83/2007 FOR HORIZONTAL AND THE VERTICAL DATUM IS NAVD 1988 FROM NSA AND NGS MONUMENTS.
3. THE SURVEY WAS COMPLETED FOR ARCADIS USA.
4. NO PROPERTY LINE DATA WAS REQUESTED.
5. ANY AREA SHOWN ON THE MAP THAT IS LABELED •DENSE TREES• WILL NOT BE WITHIN NATIONAL MAP ACCURACY STANDARDS. NO FIELD VERIFICATION WAS DONE IN THESE AREAS AS REQUESTED BY ARCADIS. THESE AREAS ARE •USE AT YOUR OWN RISK•.
6. AS-BUILT LOCATIONS WERE COMPLETED IN MARCH 2014.
7. WATER LINE SHOWN THUS: —W— BY TRENCH LOCATIONS.
8. WATER LINE SHOWN THUS: - - W - - NO ABOVE GROUND TRENCH, POSITION ESTIMATED.
9. TIE DISTANCES SHOWN TO THE LINE ARE APPROXIMATE.
10. THE CAP COULD NOT BE REMOVED FROM SOME PVC PIPES. THESE ARE NOTED AS "CAP" ON THIS PLAN.

GRAPHIC SCALE

30 0 15 30 60

(IN FEET)
1 inch = 30ft.

KCI TECHNOLOGIES
ENGINEERS
PLANNERS
SCIENTISTS
CONSTRUCTION MANAGERS
936 RIDGEBROOK ROAD
SPARKS, MARYLAND 21152
TELEPHONE: (410) 316-7800
FAX: (410) 316-7818

REVISIONS

NO.	DATE	DESCRIPTION	BY
1	4-11-14	ADDITIONAL LOCATIONS	K.N.T.

DATE: MAY 28, 2013
SCALE: 1" = 30'
DESIGNED BY:
DRAWN BY: K.N.T.

FORT MEADE
PIPE LINE TOPOGRAPHY
AS-BUILT
FORT MEADE, MARYLAND

DRAWING NO.
SHEET 5 OF 8
KCI JOB NUMBER 29-100497.12

PLOTTED: 11:12 AM on Tuesday, April 15, 2014
BY: Kimberly Taylor Division: P092 Survey, Eng
FILE: M:\100497\29\04-PDF\Exhibits\APRIL 2014\MeadeSheet5.dgn

NOTES:
1. THE INFORMATION SHOWN HEREON IS BASED ON AN AERIAL MAPPING SURVEY BY VIRGINIA RESOURCE MAPPING IN MAY OF 2013. NO FIELD VERIFICATION WAS DONE. TWO SMALL STRIPS OF FIELD RUN TOPOGRAPHY WERE PERFORMED BY KCI TECHNOLOGIES, INC. AT IW-1 NORTHERLY TO THE ROAD AND IW-4 EASTERLY TO THE ROAD.
2. THE DATUM FOR THE SURVEY IS BASED ON THE MARYLAND COORDINATE SYSTEM NAD 83/2007 FOR HORIZONTAL AND THE VERTICAL DATUM IS NAVD 1988 FROM NSA AND NGS MONUMENTS.
3. THE SURVEY WAS COMPLETED FOR ARCADIS USA.
4. NO PROPERTY LINE DATA WAS REQUESTED.
5. ANY AREA SHOWN ON THE MAP THAT IS LABELED •DENSE TREES• WILL NOT BE WITHIN NATIONAL MAP ACCURACY STANDARDS. NO FIELD VERIFICATION WAS DONE IN THESE AREAS AS REQUESTED BY ARCADIS. THESE AREAS ARE •USE AT YOUR OWN RISK•.
6. AS-BUILT LOCATIONS WERE COMPLETED IN MARCH 2014.
7. WATER LINE SHOWN THUS: —W— BY TRENCH LOCATIONS.
8. WATER LINE SHOWN THUS: --W--W-- NO ABOVE GROUND TRENCH, POSITION ESTIMATED.
9. TIE DISTANCES SHOWN TO THE LINE ARE APPROXIMATE.
10. THE CAP COULD NOT BE REMOVED FROM SOME PVC PIPES. THESE ARE NOTED AS "CAP" ON THIS PLAN.

KCI TECHNOLOGIES
ENGINEERS
PLANNERS
SCIENTISTS
CONSTRUCTION MANAGERS
936 RIDGEBROOK ROAD
SPARKS, MARYLAND 21152
TELEPHONE: (410) 316-7800
FAX: (410) 316-7818

REVISIONS			
NO.	DATE	DESCRIPTION	BY
1	4-11-14	ADDITIONAL LOCATIONS	K.N.T.

DATE: MAY 28, 2013
SCALE: 1" = 30'
DESIGNED BY:
DRAWN BY: K.N.T.

FORT MEADE
PIPE LINE TOPOGRAPHY
AS-BUILT
FORT MEADE, MARYLAND

DRAWING NO.
SHEET 6 OF 8
KCI JOB NUMBER 29-100497.12

PLOTTED: "11:10 AM on Tuesday, April 15, 2014"
BY: Kimberly Taylor Division: P092 Survey, Eng
FILE: M:\2010\29\100497\29-100497-APRIL 2014\MeadeSheet6.dgn

NOTES:
1. THE INFORMATION SHOWN HEREON IS BASED ON AN AERIAL MAPPING SURVEY BY VIRGINIA RESOURCE MAPPING IN MAY OF 2013. NO FIELD VERIFICATION WAS DONE. TWO SMALL STRIPS OF FIELD RUN TOPOGRAPHY WERE PERFORMED BY KCI TECHNOLOGIES, INC. AT IW-1 NORTHERLY TO THE ROAD AND IW-4 EASTERLY TO THE ROAD.
2. THE DATUM FOR THE SURVEY IS BASED ON THE MARYLAND COORDINATE SYSTEM NAD 83/2007 FOR HORIZONTAL AND THE VERTICAL DATUM IS NAVD 1988 FROM NSA AND NGS MONUMENTS.
3. THE SURVEY WAS COMPLETED FOR ARCADIS USA.
4. NO PROPERTY LINE DATA WAS REQUESTED.
5. ANY AREA SHOWN ON THE MAP THAT IS LABELED •DENSE TREES• WILL NOT BE WITHIN NATIONAL MAP ACCURACY STANDARDS. NO FIELD VERIFICATION WAS DONE IN THESE AREAS AS REQUESTED BY ARCADIS. THESE AREAS ARE •USE AT YOUR OWN RISK•.
6. AS-BUILT LOCATIONS WERE COMPLETED IN MARCH 2014.
7. WATER LINE SHOWN THUS: ——W—— BY TRENCH LOCATIONS.
8. WATER LINE SHOWN THUS: - - W - - W - - NO ABOVE GROUND TRENCH, POSITION ESTIMATED.
9. TIE DISTANCES SHOWN TO THE LINE ARE APPROXIMATE.
10. THE CAP COULD NOT BE REMOVED FROM SOME PVC PIPES. THESE ARE NOTED AS "CAP" ON THIS PLAN.

-N-

LEGEND

- RAIL ROAD TRACK
- WOODS LINE
- STORM DRAIN LINE
- OH — OVER HANG WIRE
- FENCE LINE
- UTILITY POLE
- WELL — MONITORING WELL
- WATER VALVE
- CO — CLEAN OUT
- W — WATER LINE
- W — WATER LINE

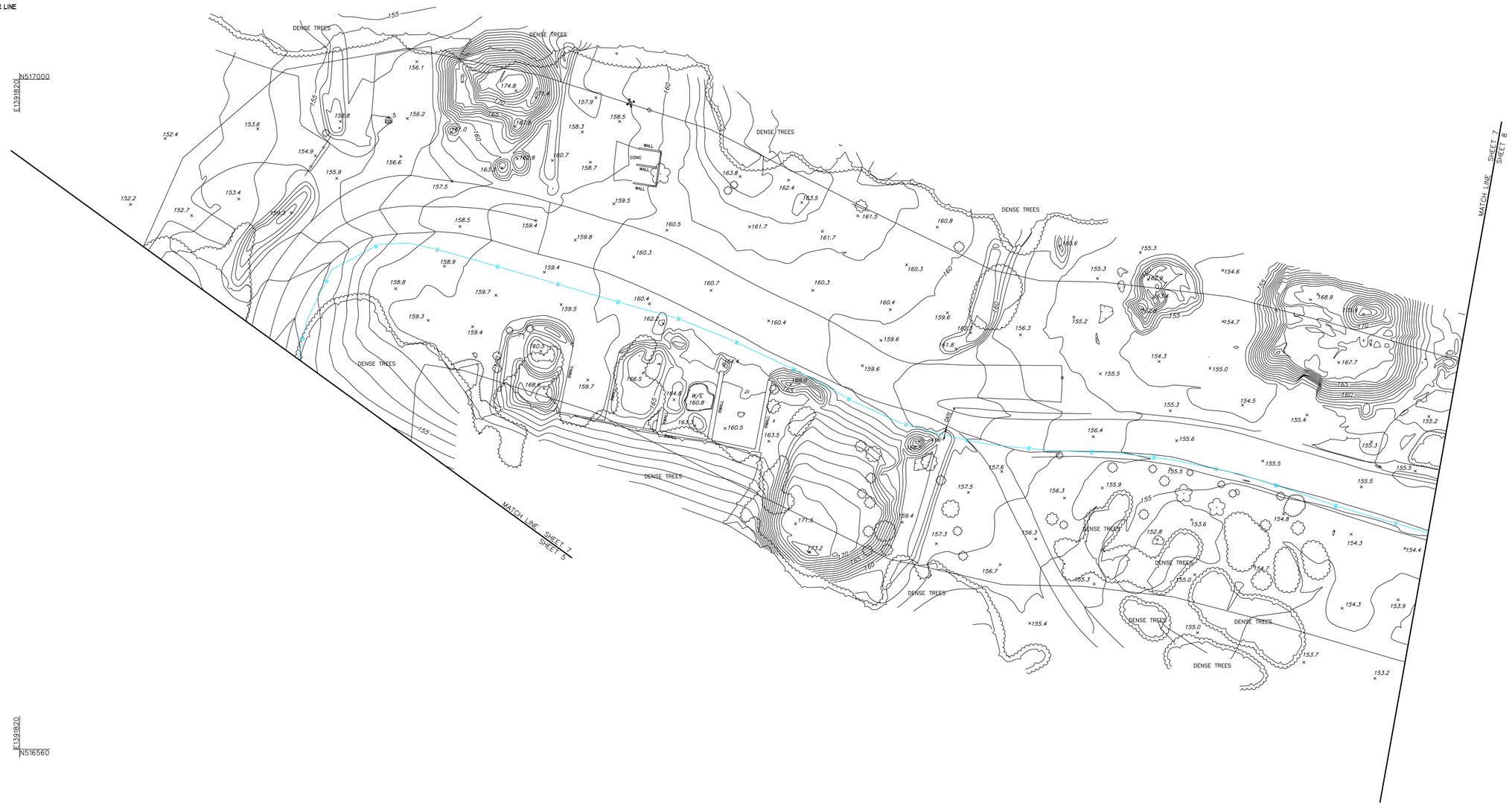

GRAPHIC SCALE
30 0 15 30 60
(IN FEET)
1 inch = 30ft.

KCI TECHNOLOGIES
ENGINEERS
PLANNERS
SCIENTISTS
CONSTRUCTION MANAGERS
936 RIDGEBROOK ROAD
SPARKS, MARYLAND 21152
TELEPHONE: (410) 316-7800
FAX: (410) 316-7818

REVISIONS			
NO.	DATE	DESCRIPTION	BY
1	4-11-14	ADDITIONAL LOCATIONS	K.N.T.

DATE MAY 28, 2013
SCALE 1" = 30'
DESIGNED BY
DRAWN BY K.N.T.

FORT MEADE
PIPE LINE TOPOGRAPHY
AS-BUILT
FORT MEADE, MARYLAND

DRAWING NO.
SHEET 7 OF 8
KCI JOB NUMBER 29-100497.12

PLOTTED: "11:05 AM on Tuesday, April 15, 2014"
BY: Kimberly Taylor Division: FD52 Survey, Eng
FILE: N:\100497\FD52\Drawings_2013 Maps\Sheet7.dgn

N517000
E1392500

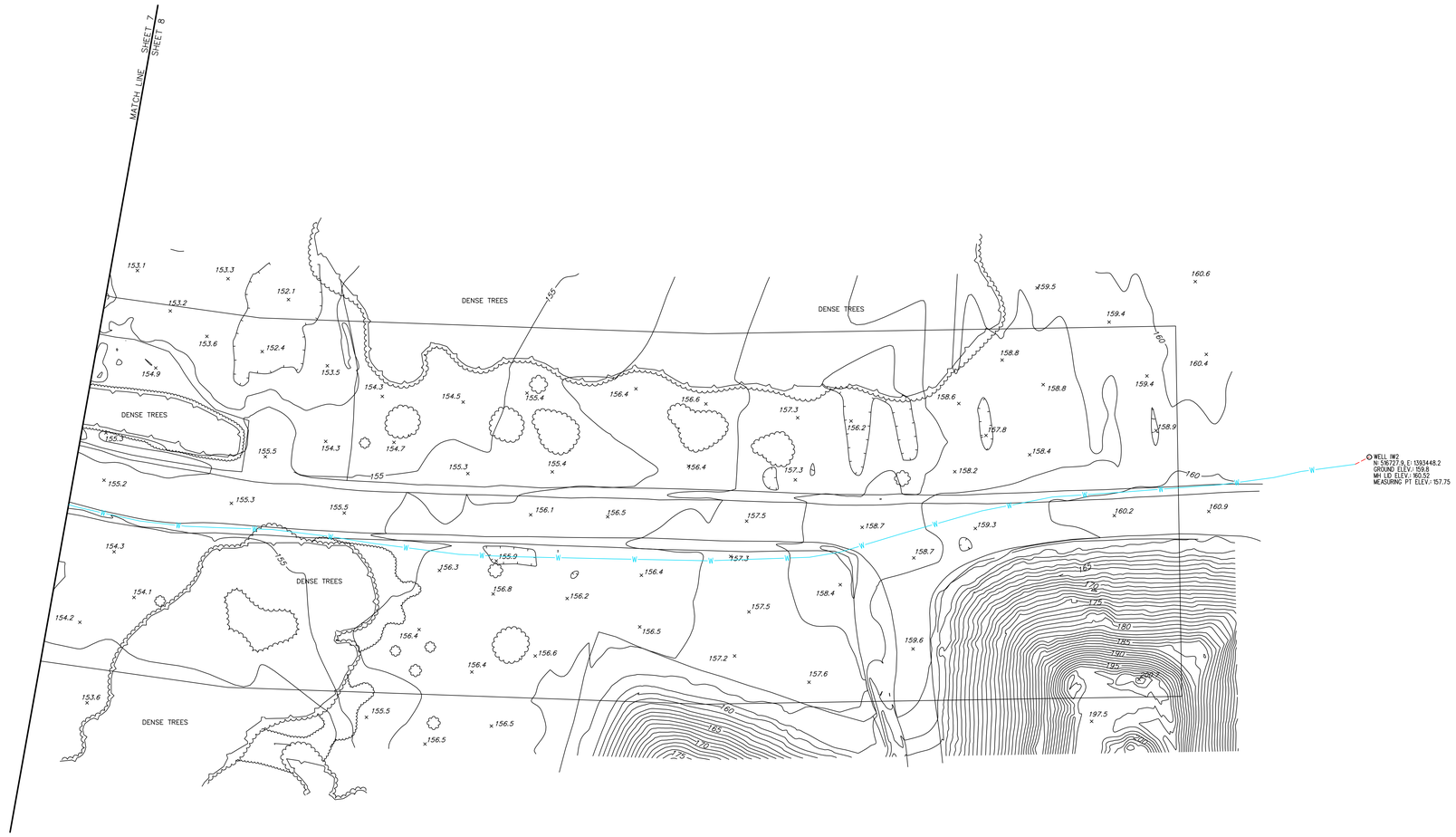

E1392500
N516400

E1393500
N516400

LEGEND

- RAIL ROAD TRACK
- WOODS LINE
- STORM DRAIN LINE
- OVER HANG WIRE
- FENCE LINE
- UTILITY POLE
- MONITORING WELL
- WATER LINE
- WATER LINE

NOTES:
1. THE INFORMATION SHOWN HEREON IS BASED ON AN AERIAL MAPPING SURVEY BY VIRGINIA RESOURCE MAPPING IN MAY OF 2013. NO FIELD VERIFICATION WAS DONE. TWO SMALL STRIPS OF FIELD RUN TOPOGRAPHY WERE PERFORMED BY KCI TECHNOLOGIES, INC. AT IW-1 NORTHERLY TO THE ROAD AND IW-4 EASTERLY TO THE ROAD.
2. THE DATUM FOR THE SURVEY IS BASED ON THE MARYLAND COORDINATE SYSTEM NAD 83/2007 FOR HORIZONTAL AND THE VERTICAL DATUM IS NAVD 1988 FROM NSA AND NGS MONUMENTS.
3. THE SURVEY WAS COMPLETED FOR ARCADIS USA.
4. NO PROPERTY LINE DATA WAS REQUESTED.
5. ANY AREA SHOWN ON THE MAP THAT IS LABELED •DENSE TREES• WILL NOT BE WITHIN NATIONAL MAP ACCURACY STANDARDS. NO FIELD VERIFICATION WAS DONE IN THESE AREAS AS REQUESTED BY ARCADIS. THESE AREAS ARE •USE AT YOUR OWN RISK•.
6. AS-BUILT LOCATIONS WERE COMPLETED IN MARCH 2014.
7. WATER LINE SHOWN THUS: —— W —— BY TRENCH LOCATIONS.
8. WATER LINE SHOWN THUS: -- W -- W -- NO ABOVE GROUND TRENCH, POSITION ESTIMATED.
9. TIE DISTANCES SHOWN TO THE LINE ARE APPROXIMATE.
10. THE CAP COULD NOT BE REMOVED FROM SOME PVC PIPES. THESE ARE NOTED AS "CAP" ON THIS PLAN.

GRAPHIC SCALE
30 0 15 30 60
(IN FEET)
1 inch = 30ft.

KCI TECHNOLOGIES
ENGINEERS
PLANNERS
SCIENTISTS
CONSTRUCTION MANAGERS
936 RIDGEBROOK ROAD
SPARKS, MARYLAND 21152
TELEPHONE: (410) 316-7800
FAX: (410) 316-7818

REVISIONS			
NO.	DATE	DESCRIPTION	BY
1	4-11-14	ADDITIONAL LOCATIONS	K.N.T

DATE: MAY 28, 2013
SCALE: 1" = 30'
DESIGNED BY
DRAWN BY: K.N.T.

FORT MEADE
PIPE LINE TOPOGRAPHY
AS-BUILT
FORT MEADE, MARYLAND

DRAWING NO.
SHEET 8 OF 8
KCI JOB NUMBER
29-100497.12

PLOTTED:"11:09 AM on Tuesday, April 15, 2014"
BY: Kimberly Taylor Division: P:\92 Survey Emp
FILE: M:\2009\29004712\CAD\APRIL 2014\MeadeSheet8.dgn

Appendix C

Horizontal Drilling Boring Profiles
(Provided on CD)

Rev. 1/20/10
Form # 13T-1355-02

BOWEN Engineering Corporation
CONTRACTORS · ENGINEERS

PRE-PRESSURE TEST CHECKLIST

LEAK TEST INSPECTION RECORD

Customer: D+D

Date: 2/26/14

Location: Ft. MEADE DUMP SITE 2"/3" LEACHATE

Equipment#

Bowen Job # 07-14-434

P&ID # N/A

Drwg# N/A

Account#

Type of Testing Performed
(Circle One)

Hydrostatic Pneumatic Service Vacuum Die Leak Diesel Holiday Other

Test Pressure: 110 psi

Actual Psig 110 – 106

Design Pressure: 100 psi

Leakage Accrual Allowance: 5psi /2hrs

Test Medium: WATER

Hold Time: 2hrs

Ambient Temp. 28°F

Part Temp.

Acceptance:

Bowen Engineering QC Manager/Inspector — Signature — Date 2/26/14

D+D ~~Bowen Engineering~~ QA Inspector — Signature — Date 2/26/14

Arcadis Client QA Inspector — Signature — Date 2/26/14

Comments or description of test:

Rev. 1/20/10
Form # 13T-1355-02

BOWEN Engineering Corporation
CONTRACTORS · ENGINEERS

PRE-PRESSURE TEST CHECKLIST

LEAK TEST INSPECTION RECORD

Customer: D+D 4"

Date: 2/27/14

Location: FT. MEADE DUMP SITE DRAIN LINE

Equipment#

Bowen Job # 07-14-434

P&ID # N/A

Drwg# N/A

Account#

Type of Testing Performed
(Circle One)

Hydrostatic Pneumatic Service Vacuum Die Leak Diesel Holiday Other

Test Pressure: 110

Actual Psig 110 → 106 PSI

Design Pressure:

Leakage Accrual Allowance: 5% psi ~5.5psi

Test Medium: WATER

Hold Time: 2 HRS

Ambient Temp. 25°

Part Temp.

Acceptance:

Bowen Engineering QC Manager/Inspector — Signature — Date 2-27-14

D+D QA Inspector — Signature — Date 2-27-14

ARCADIAS QA Inspector — Signature — Date 2-27-14

Comments or description of test:

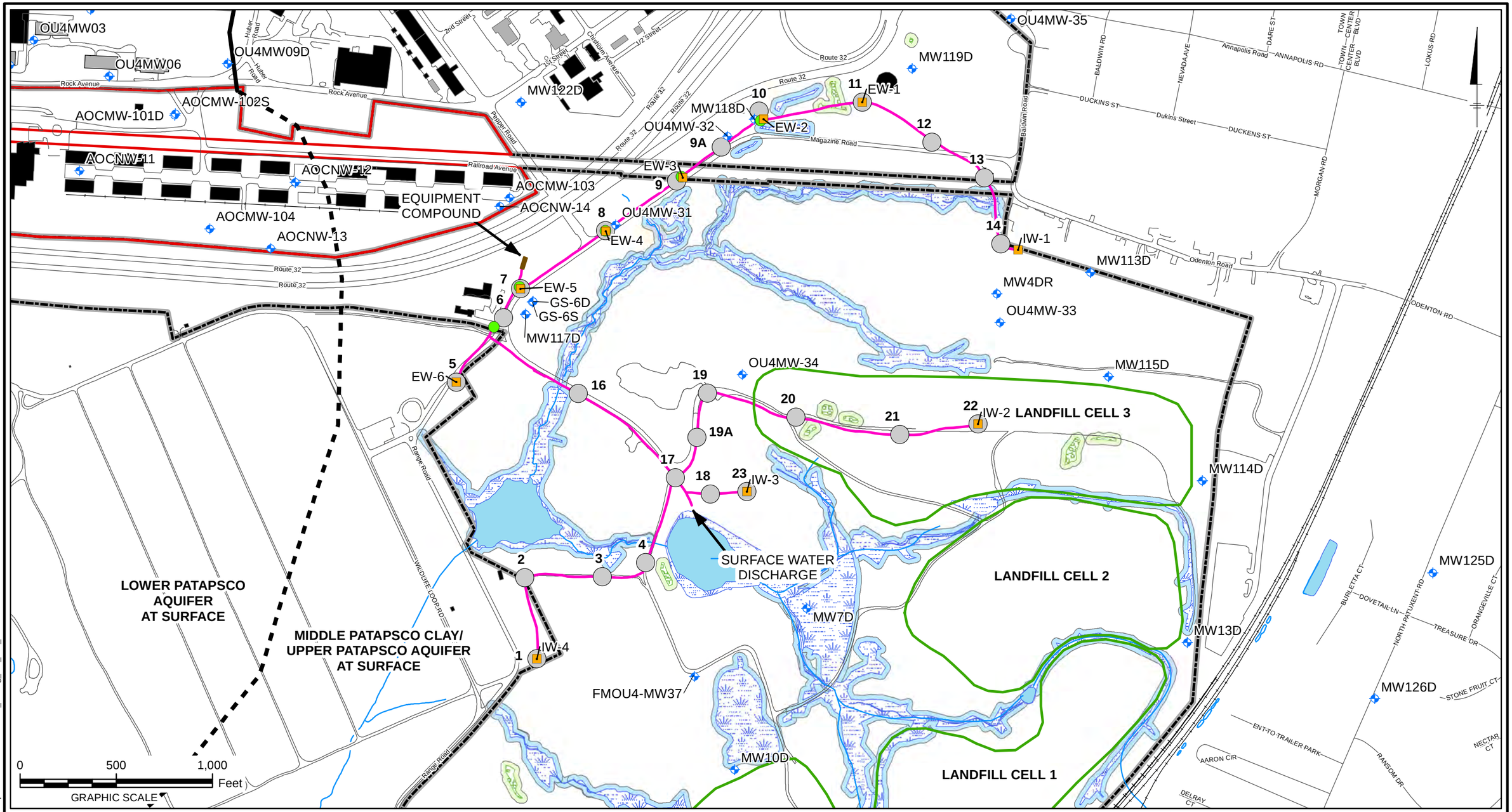

LEGEND:

- FINAL LPA WELL LOCATION
- LOWER PATAPSCO AQUIFER WELL
- PIPE CLEANOUT LOCATION
- SUBSURFACE PIPING
- DEMOLISHED STRUCTURES
- EXISTING STRUCTURES
- ROADS
- RAILROAD
- STREAM
- SURFACE WATER
- ARCHITECT OF THE CAPITOL PROPERTY BOUNDARY
- INSTALLATION BOUNDARY
- LANDFILL CELL BOUNDARY
- MID-PATAPSCO CLAY CONTACT DASHED WHERE INFERRED
- ISOLATED WETLAND (MDE)
- ISOLATED WETLAND BOUNDARY (25 FT MDE)
- JURISDICTIONAL WETLANDS & WATERS OF THE UNITED STATES
- CZM RIPARIAN & WETLAND BUFFER (25 FT)
- DIRECTIONAL DRILLING ENTRANCE/EXIT PIT

NOTE: 1) DIRECTIONAL DRILLING ENTRANCE/EXIT PITS PRESENTED HEREON ARE APPROXIMATE AND ARE PROVIDED FOR REFERENCE DURING REVIEW OF THE VERTICAL ALIGNMENT PROFILES.

OPERABLE UNIT 4, LOWER PATAPSCO AQUIFER STUDY AREA
FORT MEADE, MARYLAND

INTERIM REMOVAL ACTION REPORT

DIRECTIONAL DRILLING ENTRANCE/EXIT PIT LOCATIONS

ARCADIS

FIGURE **1**

CITY: MPLS DIV/GROUP: IM DB: MG LD: KS
FORT MEADE
Path: Z:\GISPROJECTS_ENV\Fort_Meade\ArcMap\OU4\2014\2014-10\LPA_Drilling_Ent_Exit_20141020.mxd

Bore Profile Date: Nov. 8, 2013 Start Bore: 2 End Bore: 1

Depth	Footage	10	20	30	40	50	60	70	80	90	100	110	120	130	140	150	160	170	180	190	200	210	220	230	240	250	260	270	280	290	300	310	320	330	340	350	360	370	380	390	400	410	420	430	440	450	460	470	480	490	500	510	520	530	540	550	560	570	580	590	600
3'																																																															
3'-6"																																																															
4'																																																															
4'-6"																																																															
5'																																																															
5'-6"																																																															
6'																																																															
6'-6"																																																															
7'																																																															
7'-6"																																																															
8'																																																															
8'-6"																																																															
9'																																																															
9'-6"																																																															
10'																																																															
10'-6"																																																															
11'																																																															
11'-6"																																																															
12'																																																															

Utility crossing	
Electric	X
Gas	X
Communication	X
Water	X
Sewer	X
Storm Water	X

Bore Profile Date: Oct. 29, 2013 Start Bore: 2 End Bore: 3

Depth	Footage	10	20	30	40	50	60	70	80	90	100	110	120	130	140	150	160	170	180	190	200	210	220	230	240	250	260	270	280	290	300	310	320	330	340	350	360	370	380	390	400	410	420	430	440	450	460	470	480	490	500	510	520	530	540	550	560	570	580	590	600
3'																																																																
3'-6"																																																																
4'																																																																
4'-6"																																																																
5'																																																																
5'-6"																																																																
6'																																																																
6'-6"																																																																
7'																																																																
7'-6"																																																																
8'																																																																
8'-6"																																																																
9'																																																																
9'-6"																																																																
10'																																																																
10'-6"																																																																
11'																																																																
11'-6"																																																																
12'																																																																

Utility crossing

Electric	X
Gas	X
Communication	X
Water	X
Sewer	X
Storm Water	X

Bore Profile Date: Oct. 24, 2013 Start Bore: 4 End Bore: 3

Depth	Footage	10	20	30	40	50	60	70	80	90	100	110	120	130	140	150	160	170	180	190	200	210	220	230	240	250	260	270	280	290	300	310	320	330	340	350	360	370	380	390	400	410	420	430	440	450	460	470	480	490	500	510	520	530	540	550
3'																																																									
3'-6"																																																									
4'																																																									
4'-6"																																																									
5'																																																									
5'-6"																																																									
6'																																																									
6'-6"																																																									
7'																																																									
7'-6"																																																									
8'																																																									
8'-6"																																																									
9'																																																									
9'-6"																																																									
10'																																																									
10'-6"																																																									
11'																																																									
11'-6"																																																									
12'																																																									

Utility crossing

Electric	X
Gas	X
Communication	X
Water	X
Sewer	X
Storm Water	X

Bore Profile Date: Nov. 5, 2013 Start Bore: 6 End Bore: 5

Depth	Footage	10	20	30	40	50	60	70	80	90	100	110	120	130	140	150	160	170	180	190	200	210	220	230	240	250	260	270	280	290	300	310	320	330	340	350	360	370	380	390	400	410	420	430	440	450	460	470	480	490	500
3'																																																			
3'-6"																																																			
4'																																																			
4'-6"																																																			
5'																																																			
5'-6"																																																			
6'																																																			
6'-6"																																																			
7'																																																			
7'-6"																																																			
8'																																																			
8'-6"																																																			
9'																																																			
9'-6"																																																			
10'																																																			
10'-6"																																																			
11'																																																			
11'-6"																																																			
12'																																																			

Utility crossing

Electric	X
Gas	X
Communication	X
Water	X
Sewer	X
Storm Water	X

Bore Profile Date: Jan. 15, 2014 Start Bore: 6 End Bore: 16

Depth	Footage	10	20	30	40	50	60	70	80	90	100	110	120	130	140	150	160	170	180	190	200	210	220	230	240	250	260	270	280	290	300	310	320	330	340	350	360	370	380	390	400	410	420	430	440	450	460	470	480	490	500	510	520	530	540	550	560	570	580	590	600	610	620
3'								X																																																										
3'-6"																																																																		
4'																																																																		
4'-6"																																																																		
5'																																																																		
5'-6"																																																																		
6'																																																																		
6'-6"																																																																		
7'											X																																																						
7'-6"																																																																		
8'																																																																		
8'-6"																																																																		
9'																																																																		
9'-6"																																																																		
10'																																																																		
10'-6"																																																																		
11'																																																																		
11'-6"																																																																		
12'																																																																		
12'-6"																																																																		
13'																																															X																				
13'-6"																																																																		
14'																																																																		
14'-6"																																																																		
15'																																																																		
15'-6"																																																																		
16'																																																																		
16'-6"																																																																		

Bore Profile Date: Dec. 24, 2013 Start Bore: 8 End Bore: 7

Depth	Footage	10	20	30	40	50	60	70	80	90	100	110	120	130	140	150	160	170	180	190	200	210	220	230	240	250	260	270	280	290	300	310	320	330	340	350	360	370	380	390	400	410	420	430	440	450	460	470	480	490	500	510	520	530	540	550
3'	■																																																									
3'-6"		■																																																								
4'																																																										
4'-6"			■																																																							
5'				■	■	■	■																																																		
5'-6"								■	■	■	■	■	■																																												
6'														■																																					■						
6'-6"															■	■	■	■	■	■	■	■	■																										■						
7'																								■	■	■										■	■							■	■	■	■	■								
7'-6"																											■	■	■	■	■	■	■	■	■			■	■	■	■	■	■														
8'																																																										
8'-6"																																																										
9'																																																										
9'-6"																																																										
10'																																																										
10'-6"																																																										
11'																																																										
11'-6"																																																										
12'																																																										

Utility crossing

Electric	X
Gas	X
Communication	X
Water	X
Sewer	X
Storm Water	X

Bore Profile Date: Dec. 18, 2013 Start Bore: 8 End Bore: 9

Depth	Footage	10	20	30	40	50	60	70	80	90	100	110	120	130	140	150	160	170	180	190	200	210	220	230	240	250	260	270	280	290	300	310	320	330	340	350	360	370	380	390	400	410	420	430	440	450	460	470	480	490	500	510	520	530	540	550
3'																																																										
3'-6"																																																										
4'																																																										
4'-6"																																																										
5'																																																										
5'-6"																																																										
6'																																																										
6'-6"																																																										
7'																																																										
7'-6"																																																										
8'																																																										
8'-6"																																																										
9'																																																										
9'-6"																																																										
10'																																																										
10'-6"																																																										
11'																																																										
11'-6"																																																										
12'																																																										

Utility crossing

Electric	X
Gas	X
Communication	X
Water	X
Sewer	X
Storm Water	X

Bore Profile Date: Nov. 20,2013 Start Bore: 10 End Bore: 9

Depth	Footage	10	20	30	40	50	60	70	80	90	100	110	120	130	140	150	160	170	180	190	200	210	220	230	240	250	260	270	280	290	300	310	320	330	340	350	360	370	380	390	400	410	420	430	440	450	460	470	480	490	500	510	520	530	540	550	560	570	580	590	600
3'											X					X			X																																										
3'-6"																			X																																										
4'																			X																																										
4'-6"																																																														
5'																																																														
5'-6"																																																														
6'																																																														
6'-6"																													X																																
7'																																																														
7'-6"																																																														
8'																																																														
8'-6"																																																														
9'																																																														
9'-6"																																																														
10'																																																														
10'-6"																																																														
11'																																																														
11'-6"																																																														
12'																																																														

Utility crossing

Electric	X
Gas	X
Communication	X
Water	X
Sewer	X
Storm Water	X

Bore Profile Date: Oct. 31, 2013 Start Bore: 11 End Bore: 10

Depth	Footage	10	20	30	40	50	60	70	80	90	100	110	120	130	140	150	160	170	180	190	200	210	220	230	240	250	260	270	280	290	300	310	320	330	340	350	360	370	380	390	400	410	420	430	440	450	460	470	480	490	500	510	520	530	540	550	560	570	580	590	600
3'																																																																
3'-6"																																																																
4'																																																																
4'-6"																																																			X													
5'																																																																
5'-6"																																																																
6'																																																																
6'-6"																																																																
7'																																																																
7'-6"																																																																
8'																																																																
8'-6"																																																																
9'																																																																
9'-6"																																																																
10'																																																																
10'-6"																																																																
11'																																																																
11'-6"																																																																
12'																																																																

Utility crossing

Electric	X
Gas	X
Communication	X
Water	X
Sewer	X
Storm Water	X

Bore Profile Date: Nov. 1, 2013 Start Bore: 11 End Bore: 12

Depth \ Footage	10	20	30	40	50	60	70	80	90	100	110	120	130	140	150	160	170	180	190	200	210	220	230	240	250	260	270	280	290	300	310	320	330	340	350	360	370	380	390	400	410	420	430	440	450	460	470	480	490	500	510	520	530	540	550	560	570	580	590	600
3'															X																																														
3'-6"																																																													
4'																																																														
4'-6"																																																														
5'																																																														
5'-6"																																																														
6'																																																														
6'-6"																																																														
7'																																																														
7'-6"																																																														
8'																																																														
8'-6"																																																														
9'																																																														
9'-6"																																																														
10'																																																														
10'-6"																																																														
11'																																																														
11'-6"																																																														
12'																																																														

Utility crossing	
Electric	X
Gas	X
Communication	X
Water	X
Sewer	X
Storm Water	X

Bore Profile Date: Nov. 5, 2013 Start Bore: 12 End Bore: 13

Depth	Footage	10	20	30	40	50	60	70	80	90	100	110	120	130	140	150	160	170	180	190	200	210	220	230	240	250	260	270	280	290	300	310	320	330	340	350	360	370	380	390	400	410	420	430	440	450	460	470	480	490	500	510	520	530	540	550	560	570	580	590	600
3'																	X																																													
3'-6"																																																														
4'																				X																																										
4'-6"																																																														
5'																																																															
5'-6"																																																														
6'																																																															
6'-6"																																																														
7'																																																															
7'-6"																																																															
8'																																																															
8'-6"																																																															
9'																																																															
9'-6"																																																															
10'																																																															
10'-6"																																																															
11'																																																															
11'-6"																																																															
12'																																																															

Utility crossing	
Electric	X
Gas	X
Communication	X
Water	X
Sewer	X
Storm Water	X

Bore Profile Date: Nov. 8, 2013 Start Bore: 13 End Bore: 14

Depth	Footage	10	20	30	40	50	60	70	80	90	100	110	120	130	140	150	160	170	180	190	200	210	220	230	240	250	260	270	280	290	300	310	320	330	340	350	360	370	380	390	400	410	420	430	440	450	460	470	480	490	500	510	520	530	540	550	560	570	580	590	600
3'																																																																		
3'-6"																																																																	
4'																																																																	
4'-6"																																																																	
5'																																																																	
5'-6"																																																																	
6'																																																																	
6'-6"																																																																	
7'																																																																	
7'-6"																																																																	
8'																																																																	
8'-6"																																																																	
9'																																																																	
9'-6"																																																																	
10'																																																																	
10'-6"																																																																	
11'																																																																	
11'-6"																																																																	
12'																																																																	

Utility crossing

Electric	X
Gas	X
Communication	X
Water	X
Sewer	X
Storm Water	X

Bore Profile Date: Oct. 23, 2013 Start Bore: 17 End Bore: 4

Depth	Footage	10	20	30	40	50	60	70	80	90	100	110	120	130	140	150	160	170	180	190	200	210	220	230	240	250	260	270	280	290	300	310	320	330	340	350	360	370	380	390	400	410	420	430	440	450	460	470	480	490	500	510	520	530	540	550
3'	■																																																								
3'-6"		■																																																		■	■	■		
4'			■																																													■	■						
4'-6"				■																										■	■	■	■	■	■	■						■	■	■	■	■	■			■	■					
5'																												■	■								■	■	■	■	■														
5'-6"					■																						■																													
6'						■																																																			
6'-6"							■											X								■																															
7'								■																	■																																
7'-6"									■															■																																	
8'										■																																														
8'-6"																							■																																	
9'											■																																													
9'-6"												■										■																																			
10'													■																																												
10'-6"																					■																																				
11'														■						■																																					
11'-6"															■	■	■																																								
12'																		■	■																																							

Utility crossing

Electric	X
Gas	X
Communication	X
Water	X
Sewer	X
Storm Water	X

Bore Profile Date: Nov. 6, 2013 Start Bore: 17 End Bore: 16

Depth	Footage	10	20	30	40	50	60	70	80	90	100	110	120	130	140	150	160	170	180	190	200	210	220	230	240	250	260	270	280	290	300	310	320	330	340	350	360	370	380	390	400	410	420	430	440	450	460	470	480	490	500	510	520	530	540	550	560	570	580	590	600
3'																																																															
3'-6"																																																															
4'																																																															
4'-6"																																																															
5'																																																															
5'-6"																																																															
6'																																																															
6'-6"																																																															
7'																																																															
7'-6"																																																															
8'																																																															
8'-6"																																																															
9'																																																															
9'-6"																																																															
10'																																																															
10'-6"																																																															
11'																																																															
11'-6"																																																															
12'																																																															

Utility crossing	
Electric	X
Gas	X
Communication	X
Water	X
Sewer	X
Storm Water	X

Bore Profile Date: Oct. 17, 2013 Start Bore: 17 End Bore: SWD

Depth	Footage	10	20	30	40	50	60	70	80	90	100	110	120	130	140	150	160	170	180	190	200	210	220	230	240	250	260	270	280	290	300	310	320	330	340	350	360	370	380	390	400	410	420	430	440	450	460	470	480	490	500
3'																																																			
3'-6"																																																			
4'																																																			
4'-6"																																																			
5'																																																			
5'-6"																																																			
6'																																																			
6'-6"																																																			
7'							burm																																												
7'-6"																																																			
8'																																																			
8'-6"																																																			
9'																																																			
9'-6"																																																			
10'																																																			
10'-6"																																																			
11'																																																			
11'-6"																																																			
12'																																																			

Utility crossing

Electric	X
Gas	X
Communication	X
Water	X
Sewer	X
Storm Water	X

Bore Profile Date: Oct. 16, 2013 Start Bore: 18 End Bore: 23

Depth	Footage	10	20	30	40	50	60	70	80	90	100	110	120	130	140	150	160	170	180	190	200	210	220	230	240	250	260	270	280	290	300	310	320	330	340	350	360	370	380	390	400	410	420	430	440	450	460	470	480	490	500
3'																																																			
3'-6"																																																			
4'																																																			
4'-6"																																																			
5'																																																			
5'-6"																																																			
6'																																																			
6'-6"																																																			
7'																																																			
7'-6"																																																			
8'																																																			
8'-6"																																																			
9'																																																			
9'-6"																																																			
10'																																																			
10'-6"																																																			
11'																																																			
11'-6"																																																			
12'																																																			

Utility crossing

Electric	X
Gas	X
Communication	X
Water	X
Sewer	X
Storm Water	X

Bore Profile Date: Oct. 10, 2013 Start Bore: 19 End Bore: 19a

Depth	Footage	10	20	30	40	50	60	70	80	90	100	110	120	130	140	150	160	170	180	190	200	210	220	230	240	250	260	270	280	290	300	310	320	330	340	350	360	370	380	390	400	410	420	430	440	450	460	470	480	490	500
3'																																																			
3'-6"																																																			
4'																																																			
4'-6"																																																			
5'																																																			
5'-6"																																																			
6'																																																			
6'-6"																																																			
7'																																																			
7'-6"																																																			
8'																																																			
8'-6"																																																			
9'																																																			
9'-6"																																																			
10'																																																			
10'-6"																																																			
11'																																																			
11'-6"																																																			
12'																																																			

Utility crossing

Electric	X
Gas	X
Communication	X
Water	X
Sewer	X
Storm Water	X

Bore Profile Date: Oct. 15, 2013 Start Bore: 19a End Bore: 17

Depth	Footage	10	20	30	40	50	60	70	80	90	100	110	120	130	140	150	160	170	180	190	200	210	220	230	240	250	260	270	280	290	300	310	320	330	340	350	360	370	380	390	400	410	420	430	440	450	460	470	480	490	500
3'																																																			
3'-6"																																																			
4'																																																			
4'-6"																																																			
5'																																																			
5'-6"																																																			
6'																																																			
6'-6"																																																			
7'																																																			
7'-6"																																																			
8'																																																			
8'-6"																																																			
9'																																																			
9'-6"																																																			
10'																																																			
10'-6"																																																			
11'																																																			
11'-6"																																																			
12'																																																			

Utility crossing

Electric	X
Gas	X
Communication	X
Water	X
Sewer	X
Storm Water	X

Bore Profile Date: Oct.4, 2013 Start Bore: 20 End Bore: 19

Depth	Footage	10	20	30	40	50	60	70	80	90	100	110	120	130	140	150	160	170	180	190	200	210	220	230	240	250	260	270	280	290	300	310	320	330	340	350	360	370	380	390	400	410	420	430	440	450	460	470	480	490	500
3'																																																			
3'-6"																																																			
4'																																																			
4'-6"																																																			
5'																																																			
5'-6"																																																			
6'																																																			
6'-6"																																																			
7'																																																			
7'-6"																																																			
8'																																																			
8'-6"																																																			
9'																																																			
9'-6"																																																			
10'																																																			
10'-6"																																																			
11'																																																			
11'-6"																																																			
12'																																																			

Utility crossing

Electric	X
Gas	X
Communication	X
Water	X
Sewer	X
Storm Water	X

Bore Profile Date: Oct. 8, 2013 Start Bore: 21 End Bore: 20

Depth \ Footage	10	20	30	40	50	60	70	80	90	100	110	120	130	140	150	160	170	180	190	200	210	220	230	240	250	260	270	280	290	300	310	320	330	340	350	360	370	380	390	400	410	420	430	440	450	460	470	480	490	500	510	520	530	540	550	560	570	580	590	600	610	620
3'																																																																
3'-6"																																																																
4'																																																																
4'-6"																																																																
5'																																																																
5'-6"																																																																
6'																																																																
6'-6"																																																																
7'																																																																
7'-6"																																																																
8'																																																																
8'-6"																																																																
9'																																																																
9'-6"																																																																
10'																																																																
10'-6"																																																																
11'																																																																
11'-6"																																																																
12'																																																																

Utility crossing

Electric	X
Gas	X
Communication	X
Water	X
Sewer	X
Storm Water	X

Bore Profile Date: Oct.3 2013 Start Bore: 21 End Bore: 22

Depth / Footage	10	20	30	40	50	60	70	80	90	100	110	120	130	140	150	160	170	180	190	200	210	220	230	240	250	260	270	280	290	300	310	320	330	340	350	360	370	380	390	400	410	420	430	440	450	460	470	480	490	500
3'																																																		
3'-6"																																																		
4'																																																		
4'-6"																																																		
5'																																																		
5'-6"																																																		
6'																																																		
6'-6"																																																		
7'																																																		
7'-6"																																																		
8'																																																		
8'-6"																																																		
9'																																																		
9'-6"																																																		
10'																																																		
10'-6"																																																		
11'																																																		
11'-6"																																																		
12'																																																		

Utility crossing

Electric	X
Gas	X
Communication	X
Water	X
Sewer	X
Storm Water	X

Appendix G

Operation and Maintenance Manual

Operations and Maintenance Manual

Operable Unit 4 / Lower Patapsco Aquifer – Hydraulic Containment System, Fort George G. Meade, Maryland

October 2014

Christopher Spooner, P.E.
Project Engineer, MD44234

John Cherry
Phase Manager

Tim Llewellyn
Project Manager

Operation and Maintenance Manual

Operable Unit 4/Lower Patapsco Aquifer - Hydraulic Containment System, Fort George G. Meade

Prepared for:
US Army

Prepared by:
ARCADIS U.S., Inc.
1114 Benfield Blvd.,
Suite A
Millersville
Maryland 21108
Tel 410 987 0032
Fax 410 987 4392

Our Ref.:
GP09MEAD.OU41

Date:
October 2014

This document is intended only for the use of the individual or entity for which it was prepared and may contain information that is privileged, confidential and exempt from disclosure under applicable law. Any dissemination, distribution or copying of this document is strictly prohibited.

Table of Contents

1. Introduction **1**

2. System Overview **2**

2.1 System Configuration 2

2.2 Operational Settings 2

3. Equipment Description **3**

3.1 LPA Hydraulic Containment System Mechanical Equipment 3

3.1.1 Extraction Well Pumps (EP-00X) 3

3.1.2 Influent Equalization Tank (T-100) 3

3.1.3 Influent Transfer Pump (P-101) 3

3.1.4 Multi Media Filters (MMF-101, MMF-201 and MMF-303) 3

3.1.5 Liquid Granular Activated Carbon (LGAC-101, LGAC-201, LGAC-301 and LGAC-401) 4

3.1.6 Injection Equalization Tank (T-200) 4

3.1.7 Transfer Pump (P-201) 4

3.1.8 Blower (B-301) 4

3.1.9 pH and DO Adjustment Tank (T-300) 4

3.1.10 Chemical Metering Pump (P-303) 5

3.1.11 Air Compressor 5

3.1.12 Solenoid Valve (SV-501) 5

3.1.13 Decant Pump (P-501) 5

3.1.14 Backwash Solids Settling Tank (T-500) 5

4. System Electrical, Controls, and Instrumentation **6**

4.1 Electrical Power Distribution 6

4.2 System User Interface 6

4.3 System Operation 6

4.4 Remote Connection Procedure 11

4.5 Data History Trends, Data Logging Storage files and Collection 12

4.6 Alarms, Email Notification and Auto-Dialer Paging 13

4.7 Protective System Devices (PSD) 18

4.8 Telemetry Unit 19

5. System Operation Limits 20

5.1 GWRC System 20

6. System Operation Details 21

6.1 System Startup after Extended Deactivation 21

6.2 System Start Up After an Alarm Condition Shutdown 21

6.3 System Shutdown for Routine Maintenance 21

6.4 Extended System Shutdown 22

6.5 Emergency System Shutdown 22

7. Sampling Requirements and O&M Activities 23

8. Equipment Maintenance 25

8.1 LPA Hydraulic Containment System Mechanical Equipment 25

8.1.1 Multi Media Filters (MMF-101, MMF-201 and MMF-303) 25

8.1.2 LGAC Vessels (LGAC-101, 201, 301 and 401) 25

8.1.3 Blower (B-301) 25

8.1.4 Air Compressor (AC-401) 25

8.1.5 Dissolved Oxygen Transmitter (AI-301A) 25

8.1.6 pH Transmitter (AI-301B) 26

8.1.7 Pumps 26

8.1.8 Flow Meters 26

8.1.9 Level Switches 26

8.1.10 Pressure Transducers 26

9. Waste Handling and Disposal 27

Figures

Figure 1 Injection Well Vault Details

Figure 2 Extraction Well Vault Details

Figure 3 Extraction and Injection Well Construction

Appendices

Appendix A System Drawings
Appendix B Equipment Specifications Cut Sheets and O&M Manuals
Appendix C Lockout/Tagout Procedure
Appendix D HMI SOP
Appendix E Initial Start-up Procedure
Appendix F Technical Note 802 – Leak Testing of Polyehtylene Pipe for Municipal and Industrial Applications
Appendix G Hydraulic Containment System Bio-fouling Management Plan

List of Acronyms and Abbreviations

%	Percent
AC	Air Compressor
Amp	amperes
CFM	cubic feet per minute
DO	Dissolved Oxygen
E-STOP	Emergency Stop
EP	Extraction Well Pump
FAL	Low Flow Alarm
FCV	Flow Control Valve
FE/FIT	Flow Transmitter
FGGM	Fort George G. Meade
FQI	Flow Totalizer
ft	feet or foot
GWRC	Groundwater Remediation Containment
gpm	gallons per minute
HC	Hydraulic Containment
HMI	Human Machine Interface
HP	horsepower
HZ	Hertz
I/O	Input/Output
IRAWP	Interim Removal Action Work Plan
LAH	High Level Alarm
LAL	Low Level Alarm
LGAC	Liquid Granular Activated Carbon

List of Acronyms and Abbreviations continued

LPA	Lower Patapsco Aquifer
LSH	leak detection switch
LSHH	High High Level Switch
LSLL	Low Low Level Switch
MCE	motor control enclosure
MCP	main control panel
MMF	Multimedia Filters
NPDES	National Pollutant Discharge Elimination System
O&M	Operation and Maintenance
OIT	Operator Interface Terminal
OU-4	Operable Unit 4
P	Pump
PAH	High Pressure Alarm
PAL	Low Pressure Alarm
PDAH	high differential pressure alarm
PDAHH	high high differential pressure alarm
PIT	Pressure Transmitter
PLC	Programmable Logic Controller
PSD	Protective System Device
PSI	pounds per square inch
PSL	Low Pressure Switch
PT	Pressure Transducer
SCFM	Standard Cubic Feet per Minute
SV	Solenoid Valve

List of Acronyms and Abbreviations continued

U.S.	United States
USB	Universal Serial Bus
V	Volts
VFD	Variable Frequency Drive
YA	VFD alarm or decant pump fault

1. Introduction

ARCADIS has prepared this Hydraulic Containment (HC) System Operation and Maintenance (O&M) Manual to meet the requirements of the performance contract issued by the United States (U.S.) Army Contracting Agency, Contract W91ZLK-05-D-0015. This HC O&M Manual documents the HC system requirements and procedures for operation and maintenance of the HC System. This HC O&M Manual also specifies the field documentation and quality assurance/ quality control requirements for the performance monitoring program.

The HC treatment system is comprised of one building for water treatment and a series of extraction and re-injection wells connected via subsurface piping network. The system was constructed to operate year-round and is designed to treat groundwater impacted with chlorinated solvents and prevent the groundwater plume from migrating further down-gradient.

2. System Overview

2.1 System Configuration

The Fort George G. Meade (FGGM) Lower Patapsco Aquifer (LPA) HC system extracts groundwater impacted by chlorinated solvents emanating from Operable Unit 4 (OU-4) from a transect of six extraction wells installed in the LPA. Groundwater is pumped from the extraction wells using electric submersible pumps controlled by variable frequency drives (VFDs). Extracted groundwater is pumped from the wells to an influent equalization tank to store water prior to treatment, and re-injection into the formation. The treatment system components are housed in one connex-style building located near the intersection of Pepper and Magazine Road. Groundwater conveyance piping and electrical/communication conduit to the extraction wells are installed below grade. Each extraction well has a VFD panel and input/output (I/O) communication panel. The layout of the Fort Meade LPA HC system, extraction wells and subsurface piping network is illustrated in Appendix A. Treated effluent water from the HC system that is not re-injected can be discharged to a retention pond located at the Closed Sanitary Landfill as long as the pH and dissolved oxygen (DO) concentrations are adjusted and regulatory discharge analytical criteria are met.

2.2 Operational Settings

The FGGM LPA HC system treatment components have a maximum operating capacity of approximately 200 gallons per minute (gpm). The estimated maximum groundwater recovery rate for the system with all six extraction wells operating is approximately 180 gpm.

The FGGM LPA HC system has an operational run time goal of 95 percent (%); however, the expectation for the system is that it will run 100% of the time (not counting scheduled downtime for regular maintenance activities).

3. Equipment Description

The following section provides specifications for equipment utilized in the LPA HC System. As-built piping, instrumentation diagrams, and treatment processes are provided in Appendix A. Cut sheets and equipment manuals for all of the major treatment system components are provided in Appendix B.

3.1 LPA Hydraulic Containment System Mechanical Equipment

3.1.1 Extraction Well Pumps (EP-00X)

The extraction well pumps are Grundfos 40S50-12 with a VFD-rated motor manufactured by Franklin 5-horsepower (HP) motors. The pumps are supplied with 480 volts (V), three-phase power. Each extraction pump can provide between 5.5 to 50 gpm of flow to the system.

3.1.2 Influent Equalization Tank (T-100)

Equalization Tank T-100 is a Nowesco 500 gallon storage tank with two flanged connections on the top of the tank for loading and a flanged connection on the bottom sidewall of the tank for removing groundwater from the tank via a transfer pump. The tank has a diameter of 48 inches, and a height of 72 inches. The tank is equipped with connection ports for two level switches and level transducer.

3.1.3 Influent Transfer Pump (P-101)

Transfer pump P-101 is a Goulds vertical pump. The pump is rated for 200 gpm and is powered by a 480-V, three phase, 3-HP VFD-rated motor. The transfer pump operation is controlled by a level transducer in T-100.

3.1.4 Multi Media Filters (MMF-101, MMF-201 and MMF-303)

There are three multimedia filters (MMFs) manufactured by Yardney, Model MM3660-3A. The system is designed to run in parallel with each vessel. The system is fitted with a SOV panel, in a Nema 4x enclosure. SOV panel includes solenoids valves, terminal strip and pressure differential switch in order to tie into the other Programmable Logic Controller (PLC) for operation of filter system.

3.1.5 Liquid Granular Activated Carbon (LGAC-101, LGAC-201, LGAC-301 and LGAC-401)

Liquid granular activated carbon (LGAC) vessels manufactured by Tetrasolv modeled HPAF-2000. Each pair of vessels operates in lead lag operation. The vessels are design for a flow rate of 100 gpm and 7 pounds per square inch (PSI) pressure loss through the vessels. The max pressure rating on each vessel is 75 PSI. The outside doors provide direct access to the top of the vessels and the opening for installation/change-out of media.

3.1.6 Injection Equalization Tank (T-200)

Equalization Tank T-200 is a Nowesco 500-gallon storage tank with a flanged connection on the top of the tank for loading and a flanged connection on the bottom sidewall of the tank for removing groundwater from the tank via a transfer pump. The tank has a diameter of 48 inches, and a height of 72 inches. The tank is equipped with connection ports for two level switches and level transducer.

3.1.7 Transfer Pump (P-201)

Injection pump P-201 is a Goulds vertical pump. The pump is rated for 200 gpm and is powered by a 460-V, three phase, 15-HP VFD-rated motor. The injection pump has a max pressure of 75 PSI and operates with 173 feet (ft) of head. The inverter duty rated motor is controlled by the level transducer in tank T-200.

3.1.8 Blower (B-301)

Blower, B-301, is a Regenerative Blower TEFC. It functions on a 2-HP motor and produces 105 cubic feet per minute (CFM). The blower sends air to T-300 for a diffuser operation that will raise the DO in T-300. The blower motor is controlled by the DO level in T-300.

3.1.9 pH and DO Adjustment Tank (T-300)

pH and DO Adjustment Tank, T-300, is a Nowesco 500-gallon storage tank with a flanged connection on the top of the tank for loading and a flanged connection on the bottom sidewall of the tank for removing groundwater from the tank via a transfer pump. The tank has a diameter of 48 inches, and a height of 72 inches. The tank is equipped with a diffuser to adjust the DO level in the influent water and pH analysis equipment. The tank also has connection ports for two level switches and level transducer.

3.1.10 Chemical Metering Pump (P-303)

P-303 is a chemical metering pump that doses a chemical to adjust the pH in T-300. P-303 is a LMI pump which doses at a maximum rate of 8 gallons per hour. The pump includes a 4 function valve and a digital interface. The pump operates at 120 V.

3.1.11 Air Compressor

AC-401 is used to supply air to the pneumatic valves on the Yardney MMFs. The air compressor is single phase 120-VAC with a 1-HP motor.

3.1.12 Solenoid Valve (SV-501)

SV-501 is used to prevent backwash water from flowing into the influent tank T-100 from the backwash solids tank T-500. SV-501 is 1.5” ASCO solenoid valve part number 8210G056.

3.1.13 Decant Pump (P-501)

P-501 is used to pump decant water from the backwash storage tank T-500 to the influent storage tank T-100. P-501 is a 480-VAC three phase pump CT-Series Type part number CT053.

3.1.14 Backwash Solids Settling Tank (T-500)

T-500 is holding tank used to accept backwash water from the MMFs during the automated backwash process. T-500 is a 5000-gallon double-walled Assmann Type storage tank part number IMT-5250. The T-500 is heat traced and insulated to prevent freezing during winter months.

4. System Electrical, Controls, and Instrumentation

4.1 Electrical Power Distribution

The main power supply to the FGGM LPA HC system is 480/277 V, three-Phase, 60 Hertz (Hz), 200 Amperes (Amp) power and the transformer is located adjacent to the remediation building. It provides power to EW-4, EW-5, and EW-6 and all other system controls inside the remediation building. A secondary power supply for the FGGM LPA HC system was installed to supply power to Extraction Wells EW-1, 2, and 3 and is located adjacent to EW-2. The secondary power drop is 480/277 V, three-Phase, 60 Hz, 100 Amp power. The secondary power drop feeds power to three local extraction well pumping stations which include a VFD pumping panel and communication panel. A 125 Amp breaker inside PB-M1 feeds the motor control enclosure (MCE-1) for the FGGM LPA HC system. MCE-1 also provides power circuits for a 15 KVA 480-240/120 V transformer, a surge protection device, heaters, EW-4, and EW-6. EW-4 and EW-6 also have local VFD panel and communication panel. The 15 KVA transformer feeds the 240/120 V circuits including the building lights, receptacles, exhaust fan and a main control panel (MCP).

As-built power distribution/single line diagram drawings are provided in Appendix A.

4.2 System User Interface

Both MCE and MCP panels are located in the treatment enclosure. The MCP has a ten-inch touch screen Operator Interface Terminal (OIT) and other user control switches including an Emergency Stop (E-STOP) switch, green run power light, and red alarm light. The system has a wireless/cellular internet modem serviced by Verizon Wireless, and is provided with an unrestricted static IP address to allow remote access to the OIT. Additionally, the cellular internet modem provides internet access for alarms, and system status and reporting.

The system components, motors, and all equipment are controlled by an Allen-Bradley Compactlogix L35E PLC. System data including equipment run-times (total hours) are displayed on the OIT and recorded on an external Universal Serial Bus (USB) flash drive.

4.3 System Operation

The FGGM LPA HC system is designed to treat groundwater with a series of treatment processes prior to re-injecting treated groundwater back into the formation. The water is

first filtered with MMF vessels to remove any solids in the water. Secondly, the water is treated with LGAC and after the groundwater is treated with LGAC, can be pumped to either re-injection wells or a surface water discharge. If the injection wells are not able to accept all the treated groundwater then the water is sent to a pH and DO adjustment tank and then pumped to a designated surface water discharge point.

Groundwater is extracted from six wells via electric submersible pumps (EP-XX) and stored in influent tank T-100. These extraction well pumps are controlled by individual VFDs, and are designed to be controlled by flow or by water level. Flow totalizers on each extraction well will provide a flow pulse to the PLC and that pulse will be interpreted into a flow rate and the individual extraction well VFD will speed up and slow down based on the set-points input by the operator into the control system. During initial start-up, pumps will turn on one at a time with a 6 second delay between each pump activation. The total volume pumped from each well is measured by a flow totalizer on each extraction well pipeline. Individual pumps are disabled by a low level alarm (LAL-XXX) in the well, a high level alarm (LAH-XXX) in the well vault sump, a high pressure alarm (PAH-XXX) on the individual extraction well pipe, or a VFD alarm (YA-XXX). All extraction well pumps are disabled as a result of a critical alarm at the LPA HC system, such as a high level alarm (LAH-XX) in one of the equalization tanks or in the building sump.

Water is transferred from the influent tank T-100 via influent tank transfer pump P-101 to the MMFs. Pump P-101 is controlled by a level transmitter within tank T-100. P-101 will turn “ON” when the water level in the tank is 32” and the VFD for this pump will speed up and slow down to hold a water level of 34” in the tank. P-101 will shut “OFF” if the water level in the tank drops below 15”. The high high level switch LSHH-102 (set at ~5.5 ft) is a critical alarm device initiating alarm LAHH-102 and it will turn “OFF” the system if this switch is triggered. The low low level switch LSLL-102 (set at ~0.5 ft) is a critical alarm device initiating alarm LALL-102 and it will also turn “OFF” the system if this switch is triggered. The level transmitter has similar set-points for LAHH-102 and LALL-102. LAHH-102 and LALL-102 are critical alarms and the system will not turn back on until the alarm is cleared by the Fort Meade LPA HC operator. In addition, P-101 VFD fault (YA-101) is a critical alarm and it will turn off the system if this alarm is triggered.

The FGGM LPA HC building is equipped with a leak detection switch LSH-106. If LSH-106 is activated initiating critical alarm LAH-106, all of the extraction well pumps will be disabled and the system will go into “OFF” mode. LAH-106 is a critical alarm and the system will not turn back on until the alarm is cleared by the FGGM LPA HC System operator.

Groundwater is transferred from T-100 via P-101 to the MMFs. Downstream of P-101 there is a pressure transmitter (PIT-102) and a flow transmitter (FE/FIT-101) which relays instantaneous pressure and flow readings to the control system. Critical alarms generated from these instruments include the following:

1. High Pressure Alarm (PAH-102).

2. Low Pressure Alarm (PAL-102).

3. Low Flow Alarm (FAL-101).

PAH-102, PAL-102, and FAL-102 are critical alarms and the system will not turn back on until the alarm is cleared by the FGGM LPA HC operator.

The MMFs will remove solids from the groundwater prior to being pumped to the LGAC vessels. The MMFs will backwash automatically when a specific volume of water has run through the system, when the differential pressure has exceeded a set value, or after a specified number of operating hours. The backwash water is sent to a Backwash Solids Holding Tank T-500. T-500 is equipped with a low low (LSLL-501), low (LSL-501), high (LSH-501), and high high (LSHH-501) level switch. LSLL-501 is a critical alarm device and it will initiate alarm LALL-501 which will turn “OFF” the backwash sequence when this switch is triggered. This is notification that there may be a leak in the tank or that the tank has been emptied during a solids removal process. LSL-501 will be used to turn “OFF” the decant pump and LSH-501 will turn on the decant pump. LSHH-501 is a critical alarm device and it will initiate alarm LAHH-501 which will also turn “OFF” the entire system. The LPA HC system will not turn back on until the critical alarm is cleared by operator.

After a backwash is complete the decant timer will begin and when that timer is complete the decant pump will turn “ON” and decant the T-500. A flow transmitter (FE/FIT-102) has been installed on the backwash solids line to provide instantaneous flow reading going to T-500 during the backwash sequence. If instantaneous flow readings drop below a set level than a low flow (FAL-102) critical alarm will be generated which will turn “OFF” the system. A flow transmitter (FE/FIT-501) has also been installed on the decant pump line to provide instantaneous flow reading going to T-100 during the decant process. If instantaneous flow readings drop below a set level than a low flow (FAL-501) an alarm will be generated which will turn “OFF” the backwash pump. Downstream of the backwash pump a solenoid valve was installed to prevent water from flowing into T-100 while the decant pump is off. The solenoid valve will open during the decant sequence. A decant pump fault (YA-501) is a general alarm which will

close the solenoid valve and prevent decanting. The decant pump will not turn back "ON" until the alarm is cleared by operator and the LPA HC system will not turn back on until the critical alarms listed above are cleared by the operator as well.

The MMF is equipped with a small air compressor to provide air to the pneumatic three way valves on the MMF vessels. The air compressor is equipped with a low pressure switch (PSL-401) which is a critical alarm device. If the low pressure alarm (PAL-401) is triggered than the system will be turned "OFF". Again, the LPA HC system will not turn back on until the critical alarm is cleared by operator.

Downstream of the MMFs a pressure transmitter (PIT-104) has been installed to provide instantaneous pressure readings. PIT-102 and 104 are being used to calculate a differential pressure reading across the MMFs. If the differential pressure reading goes above a high differential pressure alarm (PDAH-101) then a backwash is initiated. If the high high differential pressure critical alarm (PDAHH-101) is triggered than the entire system will shut "OFF". The LPA HC system will not turn back on until the critical alarm is cleared by operator.

Once the groundwater has been filtered by the MMFs it's pumped moves to the four LGAC vessels for treatment. The carbon vessels are piped so the groundwater is split into two streams each treated by two carbon vessels. The carbon vessels are set-up in a lead/lag configuration. PIT-104 and 105 are being used to calculate a differential pressure reading across the LGAC vessels. If the differential pressure reading goes above a high differential pressure alarm (PDAH-102) then a general alarm is initiated. If the high high differential pressure critical alarm (PDAHH-102) is triggered than the entire system will shut "OFF". The LPA HC system will not turn back on until the critical alarm is cleared by operator.

From the LGAC vessels the water flows to Effluent Tank T-200. Water is transferred from the T-200 via effluent tank transfer pump P-201 to the injection wells. Pump P-201 is controlled by a level transmitter within tank T-200. P-201 will turn "ON" when the water level in the tank is 32" and the VFD for this pump will speed up and slow down to hold a water level of 34" in the tank. P-201 will shut "OFF" if the water level in the tank drops below 15". The high high level switch LSHH-202 (set at ~5.5 ft) is a critical alarm device initiating alarm LAHH-202 and it will turn "OFF" the system if this switch is triggered. The low low level switch LSLL-202 (set at approximately 0.5 ft) is a critical alarm device initiating alarm LALL-202 and it will also turn "OFF" the system if this switch is triggered. The level transmitter has similar set-points for LAHH-202 and LALL-202. LAHH-202 and LALL-202 are critical alarms and the system will not turn back on until the alarm is

cleared by the FGGM LPA HC operator. In addition if P-201 VFD fault (YA-201) is a critical alarm and it will turn off the system if this alarm is triggered.

A flow totalizer (FQI-XXX) is installed on the injection line manifold to provide instantaneous flow total information back to the control system for each individual injection well.

Groundwater is transferred from T-200 via P-201 to the injection wells. Downstream of P-201 there is a pressure transmitter (PIT-201) and a flow transmitter (FE/FIT-201) which relays instantaneous pressure and flow readings to the control system. Critical alarms generated from these instruments include the following:

1. High Pressure Alarm (PAH-201).

2. Low Flow Alarm (FAL-201).

PAH-201 and FAL-201 are critical alarms and the system will not turn back on until the alarm is cleared by the FGGM LPA HC operator.

PIT-201 will also be used to control the Flow Control Valve (FCV-202) which will control flow to the pH and DO Adjustment Tank (T-300). If significant backpressure is detected from the injection wells then the flow control valve will open to hold a set pressure going to the injection wells. Once groundwater begins to enter tank T-300, Blower B-301 will be turned on to supply air to adjust the DO concentration in the groundwater and the pH metering pump (P-303) will turn on to adjust the pH concentration in the tank. Low DO (AAL-301A) and high pH (AAH-301B) are critical alarm and the system will shut down if the concentration for DO or pH goes above or below their set alarm value. The LPA HC system will not turn back on until the critical alarm is cleared by operator.

Amended water is transferred from the T-300 via transfer Pump P-302 to the surface water discharge. Pump P-302 is controlled by a level transmitter within Tank T-300. P-302 will turn “ON” when the water level in the tank is 32” and the VFD for this pump will speed up and slow down to hold a water level of 34” in the tank, assuming DO and pH measurements are within set ranges. P-302 will shut “OFF” if the water level in the tank drops below 15”. The high high level switch LSHH-302 (set at ~5.5 ft) is a critical alarm device initiating alarm LAHH-302 and it will turn “OFF” the system if this switch is triggered. The low low level switch LSLL-302 (set at ~0.5 ft) is a critical alarm device initiating alarm LALL-302 and it will also turn “OFF” the system if this switch is triggered. The level transmitter has similar set-points for LAHH-302 and LALL-302. LAHH-302 and LALL-302 are critical alarms and the system will not turn back on until the alarm is

cleared by the FGGM LPA HC operator. In addition if P-302 VFD fault (YA-302) is a critical alarm and it will turn off the system if this alarm is triggered.

Groundwater is transferred from T-300 via P-302 to the retention pond. Downstream of P-302 there is a pressure transmitter (PIT-304) and a flow transmitter (FE/FIT-301) which relays instantaneous pressure and flow readings to the control system. Critical alarms generated from these instruments include the following:

1. High Pressure Alarm (PAH-304).

2. Low Flow Alarm (FAL-301).

PAH-304 and FAL-301 are critical alarms and the system will not turn back on until the alarm is cleared by the FGGM LPA HC operator

4.4 Remote Connection Procedure

The OIT can be operated locally as well as remotely using any web browser, or via a smart phone using the “C-More” application.

The following procedure explains the necessary steps to access the GWRC (groundwater remediation containment) system Human Machine Interface (HMI) remotely.

1. From any web browser, such as Internet Explorer: Connection to the OIT is accomplished by going to the link (http://166.248.120.88).

2. Select “Remote Access”, then Option 2 “With firewall connection”.

3. Click on “RUN” and the connection will be downloaded to your computer.

4. Once the connection is downloaded click on “RUN” again.

5. The system will prompt to enter username and password. Login credentials may be obtained from the ARCADIS project manager. The user should have full access to all screens and controls.

4.5 Data History Trends, Data Logging Storage files and Collection

The OIT logs data to a removable USB flash drive. Data is also remotely accessible via the web browser similar to the remote connection; however, “file list” can be selected to display all available files and may not contain most updated files. Two USB flash drives are provided, while one is attached to the OIT, the second can be taken to the office for data retrieval, then returned to the site and swapped with the other one and so on. Data log files are text format and can be saved as such and opened as a Microsoft Excel file for further analysis.

Readings are recorded based on specific requirements at the Site. Some data is recorded every minute, every 5 minutes, and every 1 hour. The most recent 500 readings are stored on the USB flash drive.

- Level EW 1, 2, 3, 4, 5, and 6 Data Trend, logs level readings for Extraction Wells 1, 2, 3, 4, 5 and 6. Units are in feet (ft).
- Level IW 1, 2, 3, and 4 Data Trend, logs level readings for Injection Wells 1, 2, 3 and 4. Units are in ft.
- Level Tank Data Trend, logs level readings for effluent tank (T-200) and pH and dissolved oxygen adjustment tank (T-300). Units are in ft.
- Flow Data Trend, logs flow readings for both gases and liquids throughout the system. Units are in standard cubic feet per minute (SCFM) and GPM.
- Pressure Data Trend, logs pressure readings throughout the system. Units are in PSI.
- Speed P-101, P-202 and P-302 Data Trend, logs VFD speed readings for P-101, P-202 and P-302. Units are in Hz.
- Speed Data Trend, logs VFD speed readings for all extraction well pumps. Units are in Hz.
- AIT Data Trend, logs dissolved oxygen and pH readings for T-300 water. Units are in milligrams per liter and percent oxygen for dissolved oxygen.

Each trend data type is saved in a separate file.

4.6 Alarms, Email Notification and Auto-Dialer Paging

The OIT is programmed to send an email notification to alert personnel of system alarms and warnings. In addition, a daily data screen shot and data log containing all instrument data is emailed to operators and designated project staff.

List of Alarms/ System Shut-Down:

- Extraction Well Status 0 – Possible cause, loss of AC power.
- Extraction Well Status 1 Vault High Sump Alarm (LAH-00X) – Possible cause, leak or overflow in extraction well vault.
- Extraction Well Status 2 – Possible cause, loss of UPS power.
- Extraction Well Low Level Alarm (LAL-00X) – Possible cause, VFD not functioning properly.
- Extraction Well Pressure Transducer Failure (PIT-00X) – Possible cause, transmitter failure, fuses blown, loose wire connection.
- Extraction Well Pressure Transmitter Failure (PT-00X) – Possible cause, transmitter failure, fuses blown, loose wire connection.
- Extraction Well High Pressure Alarm (PAH-00X) – Possible cause, blockage in pipe.
- Extraction Well Low Pressure Alarm (PAL-00X) – Possible cause, leak in piping.
- Extraction Well Pump Failure to Start – Possible cause, issue with motor starter or VFD, loose wiring.
- Extraction Well Pump VFD Fault – Possible cause, see VFD HIM for status of Fault and go to VFD trouble-shooting charts.
- MCP AC Power Alarm – Possible cause, loss of AC power.
- MCP DC Power Alarm – Possible cause, loss of AC power.
- MCP E Stop Alarm – Possible cause, loss of power, E-STOP engaged.
- Classified Area Sump High Level (LAH-106) – Possible cause, leak or overflow.
- Air Compressor Low Pressure Alarm (PAL-401) – Possible cause, leak in piping.
- Influent Tank (T-100) High-High Level Alarm (LAHH-102) – Possible cause, flows need to be balanced, issues with P-101.

- Influent Tank (T-100) Low-Low Level Alarm (LALL-102) – Possible cause, flows need to be balanced, issues with P-101.
- Influent Tank (T-100) High-High Level Alarm (LAHH-101) – Possible cause, flows need to be balanced, issues with P-101.
- Influent Tank (T-100) Low-Low Level Alarm (LAHH-101) – Possible cause, flows need to be balanced, issues with P-101.
- Tank T-100 Transducer Failure (PT-101) – Possible cause, transmitter failure, fuses blown, loose wire connection.
- High Pressure Alarm (PAHH-102) – Possible cause, blockage in pipe.
- Low Pressure Alarm (PAL-102) – Possible cause, leak in piping.
- Pressure Indicating Transducer Failure (PIT-102) – Possible cause, transmitter failure, fuses blown, loose wire connection.
- Pump P-101 Failure to Start – Possible cause, issue with motor starter or VFD, loose wiring.
- Pump P-101 VFD Fault – Possible cause, see VFD HIM for status of Fault and go to VFD trouble-shooting charts.
- Pump P-101 Low Flow Fault – Possible cause, leak in piping.
- High Pressure Alarm (PAHH-104) – Possible cause, blockage in pipe.
- Low Pressure Alarm (PAL-104) – Possible cause, leak in piping.
- Transducer Failure (PT-104) – Possible cause, transmitter failure, fuses blown, loose wire connection.
- High Differential Pressure Alarm (PDAH-101) – Possible cause, blockage in pipe.
- High-High Differential Pressure Alarm (PDAHH-101) – Possible cause, blockage in pipe.
- High Differential Pressure Alarm (PDAH-102) – Possible cause, blockage in pipe.

- High-High Differential Pressure Alarm (PDAHH-102) – Possible cause, blockage in pipe.
- High Pressure Alarm (PAHH-105) – Possible cause, blockage in pipe.
- Low Pressure Alarm (PAL-105) – Possible cause, leak in piping.
- Transducer Failure (PT-105) – Possible cause, transmitter failure, fuses blown, loose wire connection.
- Effluent Tank (T-200) High-High Level Alarm (LAHH-202) – Possible cause, flows need to be balanced, issues with P-201.
- Effluent Tank (T-200) Low-Low Level Alarm (LALL-202) – Possible cause, flows need to be balanced, issues with P-201.
- Effluent Tank (T-200) High-High Level Alarm (LAHH-201) – Possible cause, flows need to be balanced, issues with P-201.
- Influent Tank (T-200) Low-Low Level Alarm (LAHH-201) – Possible cause, flows need to be balanced, issues with P-101.
- Tank T-200 Transducer Failure (PT-201) – Possible cause, transmitter failure, fuses blown, loose wire connection.
- High Pressure Alarm (PAHH-202) – Possible cause, blockage in pipe.
- Low Pressure Alarm (PAL-201) – Possible cause, leak in piping.
- Transducer Failure (PT-201) – Possible cause, transmitter failure, fuses blown, loose wire connection.
- Pump P-201 Failure to Start – Possible cause, issue with motor starter or VFD, loose wiring.
- Pump P-201 VFD Fault – Possible cause, see VFD HIM for status of Fault and go to VFD trouble-shooting charts
- Pump P-201 Low Flow Fault – Possible cause, leak in piping.

- Flow Control Valve (ZAC-202) – Cause, flow control valve FV-202 failed to close.
- Flow Control Valve (ZAO-202) – Cause, flow control valve FV-202 failed to open.
- High Pressure Alarm (PAHH-301) – Possible cause, blockage in pipe.
- Low Pressure Alarm (PAL-301) – Possible cause, leak in piping.
- Transducer Failure (PT-301) – Possible cause, transmitter failure, fuses blown, loose wire connection.
- Tank T-300 Dissolved Oxygen Low (AIL-301A) – Cause, dissolved oxygen low.
- Tank T-300 Dissolved Oxygen Low-Low (AIL-301A) – Cause, dissolved oxygen low.
- Transducer Failure (AI-301A) – Possible cause, transmitter failure, fuses blown, loose wire connection.
- Tank T-300 pH Low (AIL-301B) – Cause, pH low.
- Tank T-300 pH Low-Low (AIL-301B) – Cause, pH low.
- Transducer Failure (AI-301B) – Possible cause, transmitter failure, fuses blown, loose wire connection.
- pH and DO Adjustment Tank (T-300) High-High Level Alarm (LAHH-302) – Possible cause, flows need to be balanced, issues with P-302.
- pH and DO Adjustment Tank (T-300) Low-Low Level Alarm (LALL-302) – Possible cause, flows need to be balanced, issues with P-302.
- pH and DO Adjustment Tank (T-300) High-High Level Alarm (LAHH-303) – Possible cause, flows need to be balanced, issues with P-302.
- pH and DO Adjustment Tank (T-100) Low-Low Level Alarm (LAHH-303) – Possible cause, flows need to be balanced, issues with P-302.
- pH and DO Adjustment Tank Transducer Failure (PT-303) – Possible cause, transmitter failure, fuses blown, loose wire connection.

- High Pressure Alarm (PAHH-304) – Possible cause, blockage in pipe.
- Low Pressure Alarm (PAL-304) – Possible cause, leak in piping.
- Transducer Failure (PT-304) – Possible cause, transmitter failure, fuses blown, loose wire connection.
- Pump P-302 Failure to Start – Possible cause, issue with motor starter or VFD, loose wiring.
- Pump P-302 VFD Fault – Possible cause, see VFD HIM for status of Fault and go to VFD trouble-shooting charts.
- Pump P-302 Low Flow Fault – Possible cause, leak in piping.
- Backwash Solids Settling Tank (T-500) High-High Level Alarm (LAHH-501) – Possible cause, flows need to be balanced, issues with P-501.
- Backwash Solids Settling Tank (T-500) Low-Low Level Alarm (LALL-501) – Possible cause, flows need to be balanced, issues with P-501.
- Pump P-302 Failure to Start – Possible cause, issue with motor starter or VFD, loose wiring.
- Pump P-302 Low Flow Fault – Possible cause, leak in piping.
- E-Stop – E-Stop pushed.

4.7 Protective System Devices (PSD)

PSDs (also referred to as interlocks) are critical devices installed to protect equipment, environment, and human health. A complete list of the PSDs and the associated system responses that occur when they are activated is included in the vendor-supplied O&M manual for the system, which is provided in Appendix B.

Each PSD is manually activated or tested each quarter to ensure proper operation. The PSDs are wired to the telemetry unit which sends notifications to designated personnel in the event that an alarm condition exists in the system. Alarm conditions are not able to be reset remotely. A technician must inspect the cause of the alarm condition and then manually reset the alarm to activate the system.

4.8 Telemetry Unit

The FGGM LPA HC system is equipped with telemetry that will notify O&M personnel in the event that an alarm condition shuts down system operation. The telemetry unit consists of an Automation Direct C-More and cellular internet modem which can send system alarm notifications by text or email. The unit is equipped with a backup battery to provide emergency power in the event of a power outage, and will send an alarm message notifying designated personnel of the power outage.

5. System Operation Limits

5.1 GWRC System

The FGGM LPA HC system process (groundwater extraction, groundwater treatment with MMFs, LGAC Vessels, DO and pH Adjustment Tank) employs safety devices to prevent it from operating outside of the operating limits of the equipment or piping. These operating limits and safety devices are described in Sections 4.3 and 4.6 above.

6. System Operation Details

6.1 System Startup after Extended Deactivation

If the equipment has been idle for an extended period, follow the start-up procedure found in Appendix E.

6.2 System Start Up After an Alarm Condition Shutdown

Following shutdown of the remedial system due to an alarm condition, the system is unable to be activated until the alarm is manually reset at the control panel. If the system has been deactivated due to an alarm condition, the following procedure will be implemented to restart the system.

- Identify which alarm condition is activated in the system and place all switches associated with that alarm in the off position.
- Investigate the equipment that was involved with the alarm.
- Verify that all equipment associated with the alarm appears in good working order and make any necessary repairs.
- Clear the alarm condition at the control panel.
- Turn the system switches to the on or auto position, activating the system.
- Observe the system as it cycles through all processes, placing additional scrutiny on the equipment that caused the previous alarm condition.
- Observe the system for several minutes to confirm proper operation, maintaining additional scrutiny on the equipment that caused the previous alarm condition. Check back periodically during the day for signs of any deviations from the design operating parameters.

6.3 System Shutdown for Routine Maintenance

Due to various maintenance activities, one or several of the remedial system components may need to be deactivated for a short period of time. During deactivation, it is required to follow lockout/tagout procedures. A copy of the lockout/tagout standard

operating procedure is included in Appendix C. To shut down the system push the "Disable" button on the HMI and the system will go through its shut-down procedures.

6.4 Extended System Shutdown

Should the system require deactivation for an extended period of time (i.e., greater than one month), extra precaution must be taken to avoid potential equipment damage while the system is dormant. The following steps document the activities that should be taken when the remedial system is to be deactivated for more than a month.

- Deactivate the system following the system shutdown steps for routine maintenance specified above.
- Remove as much water from the system as possible.
- Close all groundwater valves at the manifold.
- Open all breakers associated with system, except for those for those associated with the system buildings heaters, ventilation fans and control panels.

6.5 Emergency System Shutdown

In the event of a system condition that would require an emergency shutdown, hit the E-Stop button and if needed turn "Off" the main power disconnect for the system in a safe manner. Only trained staff or emergency personal with the correct PPE may turn off the main breaker with full load on the system.

7. Sampling Requirements and O&M Activities

Routine O&M will be performed on the system during the course of the work week (Monday – Friday) to ensure proper operation. Additional weekend visits may also be necessary to respond to system alarm conditions as needed. O&M activities will consist of:

- Taking flow rate readings from individual wells, the LGAC influent, and the discharge lines.

- Collecting influent, effluent, and surface water samples to confirm treatment of VOCs and attainment of surface water discharge parameters. If surface water discharge is not needed, compliance sampling for NPDES equivalency will not be conducted. Should surface water discharge activities commence, NPDES equivalency compliance sampling will be implemented at the same frequency (weekly for the first quarter, bi-weekly or monthly thereafter) upon startup of surface discharge activities.

- Collecting water level readings from monitor wells surrounding the extraction wells to confirm the capture zone of the HC system

- Optimizing the HC system to effectively and efficiently capture the impacted groundwater and maximize injection of treated water back into the LPA

- Collect system readings to confirm normal operation of the system components

All data will be collected automatically by the HMI system and automatically distributed to engineers and operators.

System influent and effluent samples are collected once per month to evaluate the performance of the system and reported quarterly to demonstrate water being discharged to surface waters, if any, meets treatment criteria as identified in the Interim Removal Action Work Plan (IRAWP) (ARCADIS, 2013). If surface water discharge is not needed, compliance sampling for National Pollutant Discharge Elimination System (NPDES) permit equivalency will not be conducted. Should surface water discharge activities commence, NPDES equivalency compliance sampling will be implemented at the same frequency (weekly for the first quarter, bi-weekly or monthly thereafter) upon startup of surface discharge. Parameters to be sampled include inorganic, volatile organic compounds, polycyclic aromatic hydrocarbon, and pesticides as described in the IRAWP (ARCADIS, 2013).

Non-routine O&M activities such as pressure testing of the subsurface high density polyethylene (HDPE) conveyance piping and implementation of a bio-fouling management plan may occur as warranted. Appendix F includes procedures for performing pressure leak testing on the HDPE lines. Appendix G summarizes the procedures and chemical additives which may be used during operation and maintenance of the LPA HC treatment system to address bio-fouling. In the event fouling occurs or a preventative course of treatment is planned, email notice would be provided to MDE and EPA to document the specific course of action and chemical treatment that would be utilized. If conditions warrant other approaches not detailed in this letter, then a more detailed plan would be provided and work would be scheduled pending MDE and EPA concurrence.

8. Equipment Maintenance

The following section briefly documents the maintenance required on each component of the remedial system. Maintenance Schedules are included in the text below and in the O&M Manuals of the equipment in Appendix B.

8.1 LPA Hydraulic Containment System Mechanical Equipment

8.1.1 Multi Media Filters (MMF-101, MMF-201 and MMF-303)

MMF should be backwashed as needed if solids build up in the vessels.

8.1.2 LGAC Vessels (LGAC-101, 201, 301 and 401)

LGAC shall be backwashed as needed if solids build up in the vessels. Periodic sampling is required to determine when the carbon needs to be changed. Double doors are located next to the carbon vessel to allow easy removal/change out of the spent carbon from the vessels.

8.1.3 Blower (B-301)

The blower fan wheel should be checked annually for any wear, corrosion or buildup of material. The wheel should be cleaned or replaced as required. The belt should be inspected for alignment and tightness quarterly. If the belt appears worn, it shall be replaced with a belt that is within the manufacturers tolerances. The coupling of the direct drive unit should be lubricated and checked for alignment annually. The bearings should be lubricated but caution should be taken to prevent excessive lubrication. All screws and bolts should be inspected quarterly to ensure blower vibration has not caused them to loosen. The inlet air filter should be check monthly and cleaned as necessary.

8.1.4 Air Compressor (AC-401)

Routinely inspect air filter for debris or clogging. Inspect for leaks, confirm outlet pressure is within manufacturer's operating range. Routine oil changes as necessary.

8.1.5 Dissolved Oxygen Transmitter (AI-301A)

Check Dissolved Oxygen Sensor Cap for solids build up and bio-fouling, check sensor body for buildup. If fouling on the sensor cap is observed, clean with a soft brush and

alconox, if mineral deposits or extensive fouling is observed than soak in vinegar and DI water.

8.1.6 pH Transmitter (AI-301B)

Replace salt bridge as necessary.

8.1.7 Pumps

Inspect for leaks, confirm inlet pressure is below manufacturers specifications .

8.1.8 Flow Meters

Confirm internal screens are clear and free of debris, remove and flush as necessary.

8.1.9 Level Switches

Confirm there is no buildup of solids and the floats can move freely. Confirm that activated alarms function when switched.

8.1.10 Pressure Transducers

Confirm pressure transmitters are still calibrated within specifications. Send transducers out for calibration if needed.

9. Waste Handling and Disposal

During the operation of the HC system, some wastes may be produced that can be handled and disposed on-site, while other waste will require special care and transportation off-site for proper disposal. The following table lists wastes that may be produced during system operation and the means of disposal.

Waste Identification	Handling and Disposal Procedure
Granular Activated Carbon	Spent Liquid Carbon will be handled and disposed of by the carbon vendor.
Multimedia	Spent multimedia will be handled and disposed of by the multimedia vendor

Figures

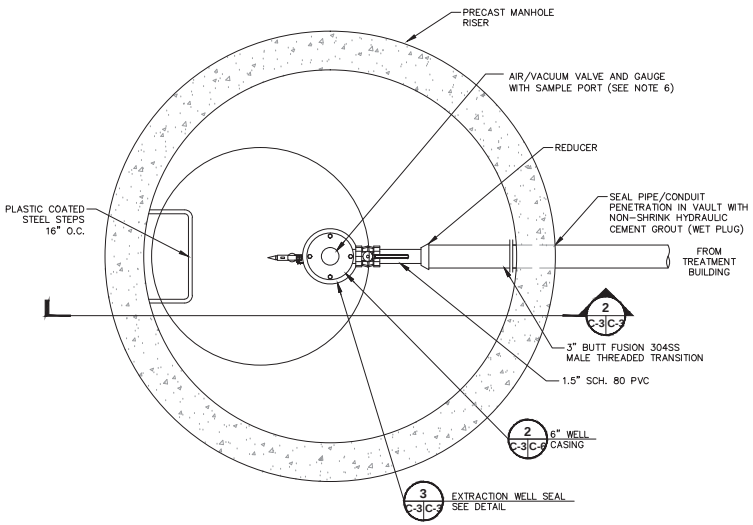

INJECTION WELL VAULT PLAN (TYP. OF 4)

1 C-1 C-3

0 6" 1'
SCALE: 1 1/2"=1'-0"

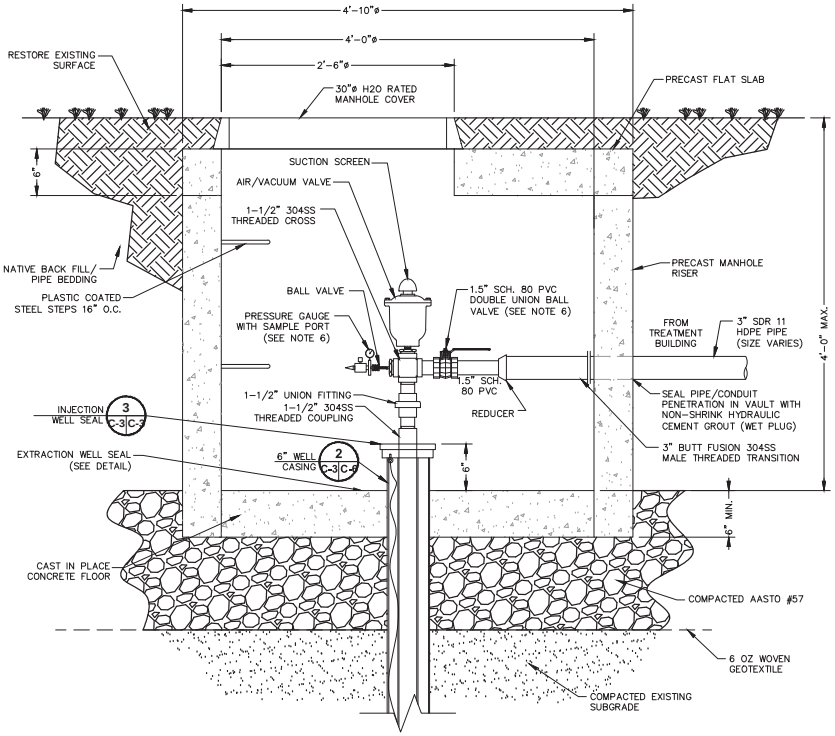

INJECTION WELL VAULT DETAIL (TYP. OF 4)

2 C-3 C-3

0 6" 1'
SCALE: 1 1/2"=1'-0"

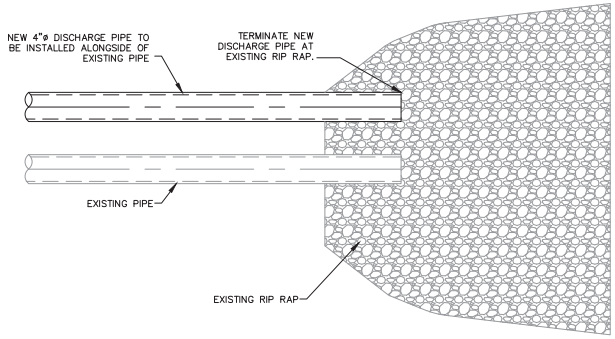

DISCHARGE POINT TO SURFACE WATER

NOT TO SCALE

4 C-1 C-3

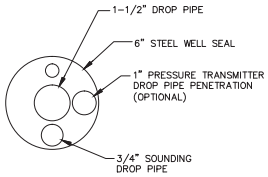

INJECTION WELL SEAL DETAIL

3 C-3 C-3

NOT TO SCALE

NOTE:
FINAL LAYOUT AND SPACING OF WELL SEAL PENETRATIONS TO BE ESTABLISHED PRIOR TO FABRICATION AS APPROVED BY THE ENGINEER.

NOTES:

1. EXISTING GROUND SUB-GRADE SHALL BE COMPACTED TO 95% OF MODIFIED PROCTOR AT ±2% OF OPTIMUM AS DETERMINED BY ASTM D1557 OR THE SATISFACTION OF THE ENGINEER PRIOR TO PLACEMENT OF THE GEOTEXTILE FABRIC AND AASHTO #57.
2. 6 OUNCE WOVEN GEOTEXTILE FABRIC SHALL BE PLACED OVER THE COMPACTED SUB-GRADE PRIOR TO PLACING AND COMPACTING AASHTO #57.
3. PLACE AND COMPACT AASHTO #57 TO THE SATISFACTION OF THE ENGINEER.
4. NATIVE BACKFILL MUST BE PRE-APPROVED BY THE ENGINEER PRIOR TO PLACEMENT AS BEDDING/BACKFILL, IF NATIVE MATERIAL IS NOT SUITABLE AS DETERMINED BY THE ENGINEER , AASHTO #57 SHALL BE USED AS BEDDING/BACKFILL TO 6" ABOVE ALL PIPING AND CONDUITS.
5. PLACE AND MECHANICALLY TAMP BEDDING/ BACKFILL IN 6 INCH LIFTS TO 95% OF MODIFIED PROCTOR AT ±2% OF OPTIMUM AS DETERMINED BY ASTM D1557 OR TO THE SATISFACTION OF THE ENGINEER.
6. ORIENTATION IS SHOWN TO PROVIDE CLARITY. ACTUAL ORIENTATION TO BE DETERMINED IN THE FIELD TO PERMIT ACCESS FOR OPERATION AND MAINTENANCE ACTIVITIES.

THIS BAR REPRESENTS ONE INCH ON THE ORIGINAL DRAWING: USE TO VERIFY FIGURE REPRODUCTION SCALE

No.	Date	Revisions	By	Ckd

THIS DRAWING IS THE PROPERTY OF THE ARCADIS ENTITY IDENTIFIED IN THE TITLE BLOCK AND MAY NOT BE REUSED OR ALTERED IN WHOLE OR IN PART WITHOUT THE EXPRESS WRITTEN PERMISSION OF SAME.

Professional Engineer's Name
Professional Engineer's No.

State	Date Signed	Project Mgr.
MD		PP
Designed by	Drawn by	Checked by

DRAFT PRIVILEGED AND CONFIDENTIAL

ARCADIS
ARCADIS U.S., INC.

OPERABLE UNIT 4 ● FORT GEORGE G. MEADE, MARYLAND
LPA HYDRAULIC CONTAINMENT SYSTEM

INJECTION WELL VAULT DETAILS

EROSION AND SEDIMENT CONTROL

ARCADIS Project No. GP09MEAD.OU41.GC001
Date SEPTEMBER 2013

ARCADIS
430 First Avenue North, Suite 720
Minneapolis, MN 55401
Tel: 612-339-9434

1

CITY:MINNEAPOLIS-MN DIV/GROUP:ENVC/AD DB:G.STEINBERGER LD: PIC:TTALELE PM:TLLEWELLYN TM:LWEIDEMANN LYR:ON=*;OFF=*REF*
G:\PROJECTS\Fort Meade\CAD\09MEAD003-C06.dwg LAYOUT: C-3 SAVED: 9/4/2013 1:17 PM ACADVER: 18.1S (LMS TECH) PAGESETUP: ---- PLOTSTYLETABLE: BLACKGRAY.CTB PLOTTED: 9/4/2013 1:18 PM BY: OBERLANDER, ROSEANNE

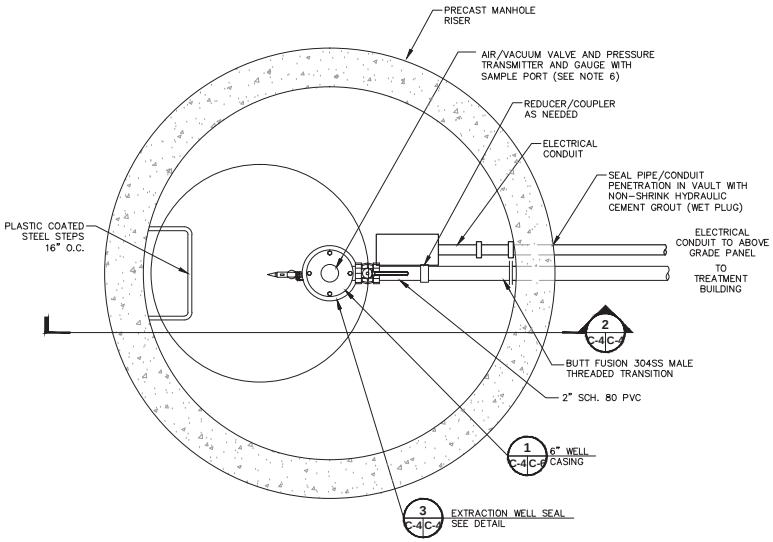

EXTRACTION WELL VAULT PLAN (TYP. OF 6)

1 C-1 C-4

0 6" 1'
SCALE: 1 1/2"=1'-0"

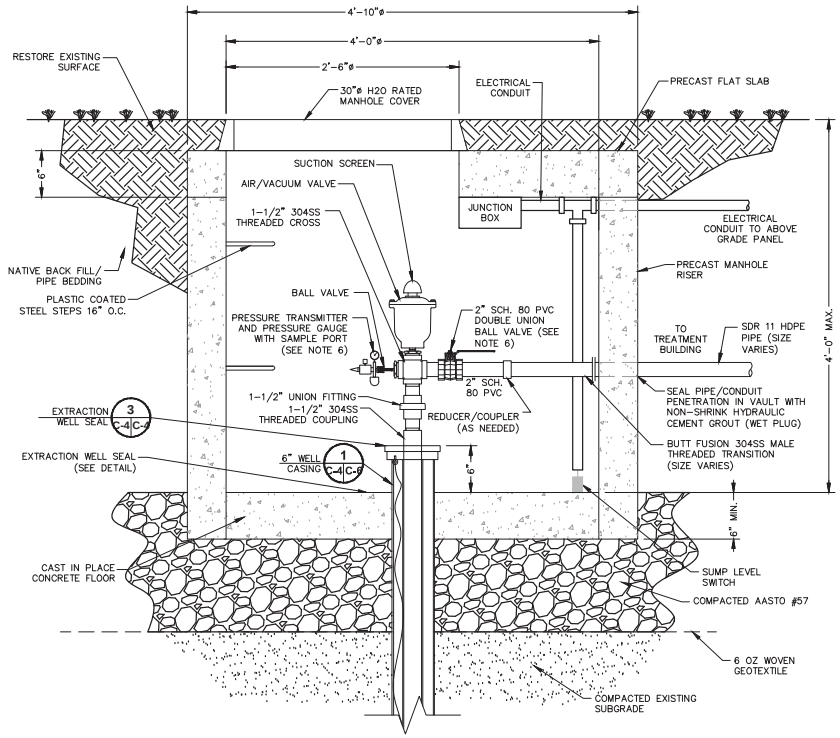

EXTRACTION WELL VAULT DETAIL (TYP. OF 6)

2 C-4 C-4

0 6" 1'
SCALE: 1 1/2"=1'-0"

NOTES:

1. EXISTING GROUND SUB-GRADE SHALL BE COMPACTED TO 95% OF MODIFIED PROCTOR AT ±2% OF OPTIMUM AS DETERMINED BY ASTM D1557 OR THE SATISFACTION OF THE ENGINEER PRIOR TO PLACEMENT OF THE GEOTEXTILE FABRIC AND AASHTO #57.
2. 6 OUNCE WOVEN GEOTEXTILE FABRIC SHALL BE PLACED OVER THE COMPACTED SUB-GRADE PRIOR TO PLACING AND COMPACTING AASHTO #57.
3. PLACE AND COMPACT AASHTO #57 TO THE SATISFACTION OF THE ENGINEER.
4. NATIVE BACKFILL MUST BE PRE-APPROVED BY THE ENGINEER PRIOR TO PLACEMENT AS BEDDING/BACKFILL, IF NATIVE MATERIAL IS NOT SUITABLE AS DETERMINED BY THE ENGINEER , AASHTO #57 SHALL BE USED AS BEDDING/BACKFILL TO 6" ABOVE ALL PIPING AND CONDUITS.
5. PLACE AND MECHANICALLY TAMP BEDDING/ BACKFILL IN 6 INCH LIFTS TO 95% OF MODIFIED PROCTOR AT ±2% OF OPTIMUM AS DETERMINED BY ASTM D1557 OR TO THE SATISFACTION OF THE ENGINEER.
6. ORIENTATION IS SHOWN TO PROVIDE CLARITY. ACTUAL ORIENTATION TO BE DETERMINED IN THE FIELD TO PERMIT ACCESS FOR OPERATION AND MAINTENANCE ACTIVITIES.

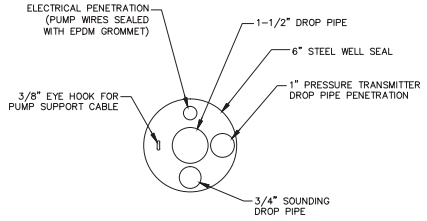

EXTRACTION WELL SEAL DETAIL

3 C-4 C-4

NOT TO SCALE

NOTE:
FINAL LAYOUT AND SPACING OF WELL SEAL PENETRATIONS TO BE ESTABLISHED PRIOR TO FABRICATION AS APPROVED BY THE ENGINEER.

CITY:MINNEAPOLIS-MN DIV/GROUP:ENVC-AD DB:G.STEINBERGER LD: PIC:TALELE PM:T.LLEWELLYN TM:L.WEIDEMANN LYR:ON=*;OFF=*REF*
G:\PROJECT\Fort Meade\CAD\GMEAD003-C06.dwg LAYOUT: C-4 SAVED: 9/4/2013 1:17 PM ACADVER: 18.1S (LMS TECH) PAGESETUP: ---- PLOTSTYLETABLE: BLACKGRAY.CTB PLOTTED: 9/4/2013 1:18 PM BY: OBERLANDER, ROSEANNE

THIS BAR REPRESENTS ONE INCH ON THE ORIGINAL DRAWING: USE TO VERIFY FIGURE REPRODUCTION SCALE

No.	Date	Revisions	By	Ckd

THIS DRAWING IS THE PROPERTY OF THE ARCADIS ENTITY IDENTIFIED IN THE TITLE BLOCK AND MAY NOT BE REUSED OR ALTERED IN WHOLE OR IN PART WITHOUT THE EXPRESS WRITTEN PERMISSION OF SAME.

Professional Engineer's Name
Professional Engineer's No.

State	Date Signed	Project Mgr.
MD		PP
Designed by	Drawn by	Checked by

DRAFT PRIVILEGED AND CONFIDENTIAL

ARCADIS
ARCADIS U.S., INC.

OPERABLE UNIT 4 ● FORT GEORGE G. MEADE, MARYLAND
LPA HYDRAULIC CONTAINMENT SYSTEM

EXTRACTION WELL VAULT DETAILS

EROSION AND SEDIMENT CONTROL

ARCADIS Project No.
GP09MEAD.OU41.GC001

Date
SEPTEMBER 2013

ARCADIS
430 First Avenue North, Suite 720
Minneapolis, MN 55401
Tel: 612-339-9434

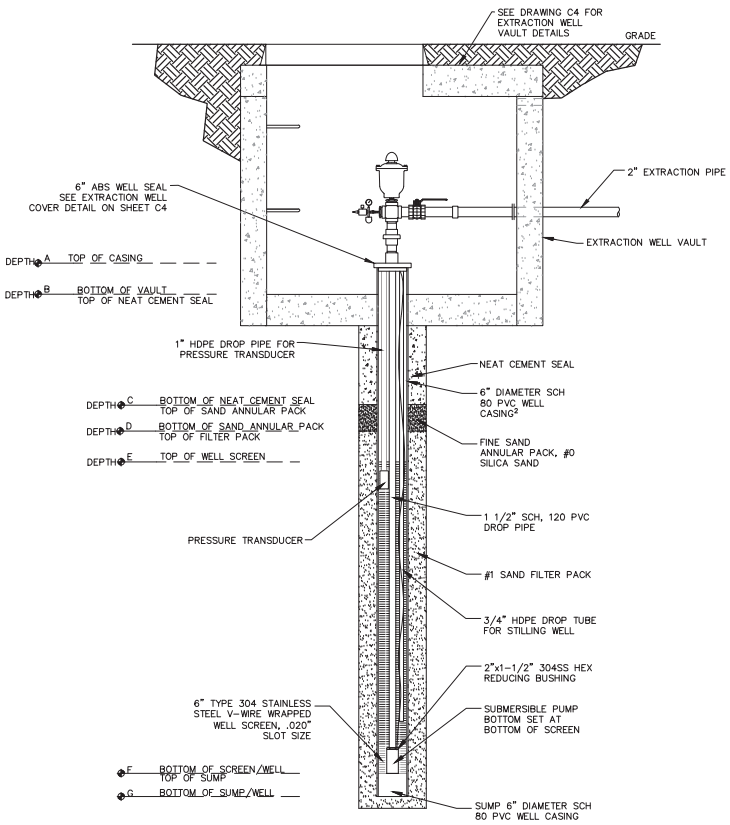

WELL CONSTRUCTION SCHEDULE[4] (FEET BELOW GRADE)

WELL TYPE	A[1]	B[1]	C	D	E	F	G
OU4EW-1	3.5	<=4	141	144	151	201	205
OU4EW-2	3.5	<=4	122	125	130	180	185
OU4EW-3	3.5	<=4	151	155	160	210	215
OU4EW-4	3.5	<=4	143	146	151	201	205
OU4EW-5	3.5	<=4	95	98	103	153	158
OU4EW-6	3.5	<=4	111	114	119	169	174

EXTRACTION WELL DETAIL

NOT TO SCALE

1 C-1/C-6

NOTE:

1. A AND B DEPTHS ARE DETERMINED BASED UPON CONFIGURATION OF WELL HEAD ASSEMBLY INSIDE WELL MANHOLE AND DEPTH TO PROCESS PIPE AT APPROXIMATELY 30" BELOW GRADE (BELOW FROST LINE).
2. ONLY EW-2 AND EW-3'S WELL CASING WERE CONSTRUCTED WITH SCH. 40 PVC.
3. OU4IW-3 WAS TERMINATED WITH NO SUMP AT 152' BELOW GRADE DUE TO OBSTRUCTION ENCOUNTERED DURING WELL INSTALLATION.
4. DEPTHS LISTED HEREON ARE BASED UPON ARCADIS OBSERVATIONS DURING CONSTRUCTION AND INSTALLATION PERFORMED BY OTHERS. ARCADIS MAKES NO GUARANTEE OF THEIR ACCURACY.

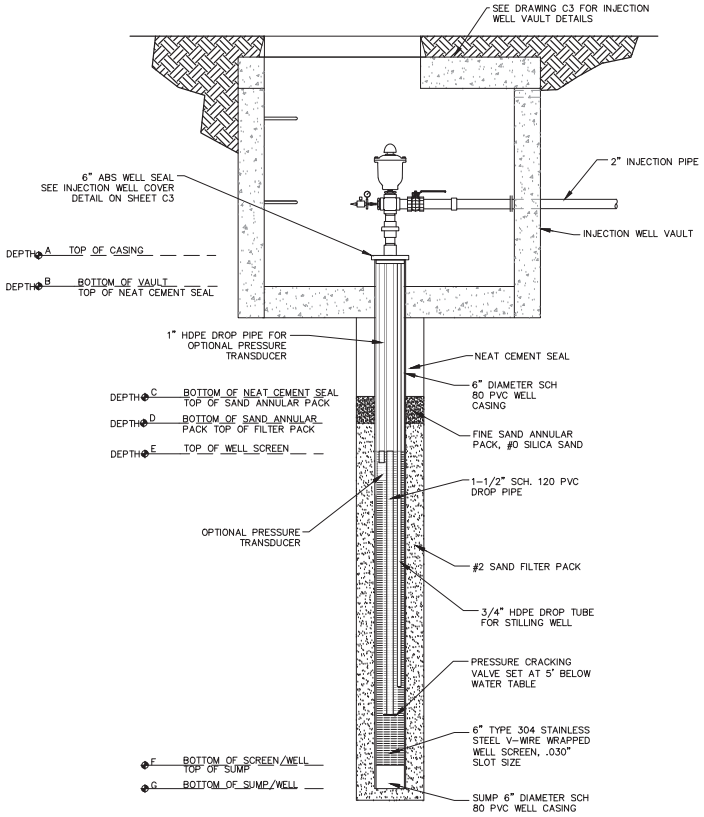

WELL CONSTRUCTION SCHEDULE[4] (FEET BELOW GRADE)

WELL TYPE	A[1]	B[1]	C	D	E	F	G
OU4IW-1	3.5	<=4	108	111	116	196	201
OU4IW-2	3.5	<=4	118	121	126	196	201
OU4IW-3	3.5	<=4	73	76	81	152	152
OU4IW-4	3.5	<=4	37	40	45	145	150

INJECTION WELL DETAIL

NOT TO SCALE

2 C-1/C-6

CITY:MINNEAPOLIS:MN DIV/GROUP:ENVCAD DB:G.STEINBERGER LD: PIC:TTALELE PM:TTLLEWELLYN TM:LWEIDEMANN LYR:ON=*;OFF=*REF* G:\PROJECTS\Fort Meade\CAD\09MEAD033-006.dwg LAYOUT: C-6 SAVED: 9/4/2013 1:17 PM ACADVER: 18.1S (LMS TECH) PAGESETUP: ---- PLOT STYLE TABLE: BLACKGRAY.CTB PLOTTED: 9/4/2013 1:19 PM BY: OBERLANDER, ROSEANNE

THIS BAR REPRESENTS ONE INCH ON THE ORIGINAL DRAWING: USE TO VERIFY FIGURE REPRODUCTION SCALE

No.	Date	Revisions	By	Ckd

THIS DRAWING IS THE PROPERTY OF THE ARCADIS ENTITY IDENTIFIED IN THE TITLE BLOCK AND MAY NOT BE REUSED OR ALTERED IN WHOLE OR IN PART WITHOUT THE EXPRESS WRITTEN PERMISSION OF SAME.

Professional Engineer's Name: -
Professional Engineer's No.: -

State	Date Signed	Project Mgr.
MD		PP
Designed by -	Drawn by -	Checked by -

DRAFT PRIVILEGED AND CONFIDENTIAL

ARCADIS U.S., INC.

OPERABLE UNIT 4 ● FORT GEORGE G. MEADE, MARYLAND
LPA HYDRAULIC CONTAINMENT SYSTEM

EXTRACTION AND INJECTION WELL CONSTRUCTION

EROSION AND SEDIMENT CONTROL

ARCADIS Project No. GP09MEAD.OU41.GC001
Date SEPTEMBER 2013

ARCADIS
430 First Avenue North, Suite 720
Minneapolis, MN 55401
Tel: 612-339-9434

Appendix A

System Drawings

Appendix B

Equipment Specifications, Cut Sheets and O&M Manuals

Table of Routine Maintenance Activities for Groundwater Recirculation System Fort Meade, Maryland			
Task	**Completed (Date/Initials)**	**Reference**	**Note**
Every Visit			
Check for leaks from pipes and fittings. Repair and replace as necessary			
Multi Media Filters: 1. Inspect for leaks. 2. Confirm differential pressure is not elevated, if elevated, backwash MMF vessels as described in equipment manual. 3. Check for trapped air by opening upper vent valve and allow small amount of liquid to flow out.			
LGAC Filters: 1. Inspect for leaks. 2. Confirm differential pressure is not elevated, if elevated, backwash carbon vessels as described in equipment manual. 3. Check for trapped air by opening upper vent valve and allowing a small amount of liquid to flow out. 5. Inspect discharge stream, if carbon is present in discharge stream shut down the system and contact the system Engineer.			
Dissolved Oxygen Sensor: Check Dissolved Oxygen Sensor Cap for solids build up and bio-fouling, check sensor body for buildup. If sensor cap observed to be fouled. 1. Leave the cam and nose cone on the sensor. 2.Rinse the sensor with clean water from a squirt bottle or spray bottle. 3. Gently wipe with a soft-bristled brush or soft cloth if bio fouling is present. Use Alconox® to remove grease. 4. If extensive fouling or mineral build-up is present, soak the cap end in vinegar for 15 min., then soak in deionized water for 15 min. If sensor body observed to be fouled clean with a soft brush and alconox, if mineral deposits or extensive fouling is observed than soak in vinegar and DI			

Table of Routine Maintenance Activities for Groundwater Recirculation System Fort Meade, Maryland			
Task	**Completed (Date/Initials)**	**Reference**	**Note**
pH Sensor: Check pH Sensor Cap for solids build up and fouling, check sensor body for buildup. Replace pH electrode salt bridge as necessary			
Pumps: 1. Inspect for leaks. 2. Confirm inlet pressure is below Engineers recommendation			
Chemical Drum: 1. Inspect for leaks. 2. Inspect and inventory site spill kit to ensure proper supplies are available			

Table of Routine Maintenance Activities for Groundwater Recirculation System Fort Meade, Maryland			
Task	**Completed (Date/Initials)**	**Reference**	**Note**
Monthly			
Blower: The inlet air filter should be check monthly and cleaned as necessary.			
pH Sensor: Verify electrodes are clean if deposits or solids build up clean electrodes with soft cloth and mild detergent. Replace salt bridge as necessary			
Chemical Metering Pumps: 1. Inspect Pumps and confirm proper operation, 2. Inspect injection check valve, 3. If equipped with relief tubing and multi-function valve, don face mask, and 1/4 turn the black knob on the valve. The discharge line is now depressurized. Keep valve open until solution drains back down the discharge tubing into solution drum or tank. Then 1/4 turn knob to normal position.			

Table of Routine Maintenance Activities for Groundwater Recirculation System Fort Meade, Maryland			
Task	**Completed (Date/Initials)**	**Reference**	**Note**
Quarterly			
Solenoid and Motorized Valves: 1. Inspect and confirm correct operation.			
Blower: The belt should be inspected for alignment and tightness quarterly. If the belt appears worn, it shall be replaced with a belt that is within the manufacturers tolerances. All screws and bolts should be inspected quarterly to ensure blower vibration has not caused them to loosen.			
Flow Meters: Confirm internal screens are clear and free of debris, remove and flush as necessary.			
Level Switches: Confirm there is no solids build up and floats can move freely. Confirm that activated alarms function when switched.			
Pressure Transducers: Confirm pressure transmitters are still calibrated within specifications. Send transducers out for calibration if needed.			
Air Compressor: 1. Change crankcase oil (oil should be changed every 500 operating hours). See manual for details on oil specifications. 2. Check entire system for air leakage around fittings, connections, and gaskets, using soap solution and brush. 3. Tighten nuts and cap screws as required. 4. Check and clean compressor valves, replace springs, discs, and seats if worn or damaged. 5. Pull ring on all pressure relief valves to assure proper operation.			

Table of Routine Maintenance Activities for Groundwater Recirculation System Fort Meade, Maryland			
Task	**Completed (Date/Initials)**	**Reference**	**Note**
Semi-Annually			
Flowmeters: 1. Inspect cable connections on terminal strips and terminal blocks. Verify that terminal connections are tight and physically sound with no sign of corrosion. 2. Verify that the moisture barriers and seals protecting the electronics in the local enclosure is adequate and that no moisture is entering the enclosure. 3. Verify that all seals are performing properly and that there is no leakage of the process media. Check for deterioration of the gaskets and environmental seals used. 4. Remove the flow element for inspection based on historical evidence of debris, foreign matter, or scale build-up and appropriate plant shutdown schedules and procedures. Check for corrosion, stress cracking, and/or build-up of oxides, salts, or foreign substances. The thermowells must be free of excessive contaminants and be physically intact. Any debris or residue build-up could cause inaccurate flow indication. Clean the flow element, as necessary, with a soft brush			
Annually			
Blower: The blower fan wheel should be checked annually for any wear, corrosion or buildup of material. The wheel should be cleaned or replaced as required. The coupling of the direct drive unit should be lubricated and checked for alignment annually. The bearings should be lubricated but caution should be taken to prevent excessive lubrication.			
Chemical Metering Pumps: 1. Use Proper PPE and replace pump diaphragm and associated parts - refer to Instruction Manual.			
Flowmeter: Verify flowmeter is still calibrated properly. Send meter to be recalibrated if needed.			

Table of Routine Maintenance Activities for Groundwater Recirculation System Fort Meade, Maryland			
Task	**Completed (Date/Initials)**	**Reference**	**Note**
Safety Equipment Checklist			
* Please check the following safety equipment's onsite if available.			
- Eye wash	expired (Y / N)		
- Fire extinguishers	Monthly inspection complete & tag initialed? (Y/ B)		
	Last yearly inspection?		
- First aid kit	expired (Y / N)		

CRITICAL DEVICE

PID DEVICE Tag Name	ALARM NAME	SET POINT	MANUFACTURER	TYPE OF INSTRUMENT
LIT-001	LAL-001	30-Ft	Geotech	Level Transducer
PIT-001	PAL-001	10-PSI	Ashcroft	Pressure Indicating Trans.
PIT-001	PAH-001	75-PSI	Ashcroft	Pressure Indicating Trans.
LSH-001	LAH-001	1-IN	PLC	Level Switch
LIT-002	LAL-002	30-Ft	Geotech	Level Transducer
PIT-002	PAL-002	10-PSI	Ashcroft	Pressure Indicating Trans.
PIT-002	PAH-002	75-PSI	Ashcroft	Pressure Indicating Trans.
LSH-002	LAH-002	1-IN	PLC	Level Switch
LIT-003	LAL-003	30-Ft	Geotech	Level Transducer
PIT-003	PAL-003	10-PSI	Ashcroft	Pressure Indicating Trans.
PIT-003	PAH-003	75-PSI	Ashcroft	Pressure Indicating Trans.
LSH-003	LAH-003	1-IN	PLC	Level Switch
LIT-004	LAL-004	30-Ft	Geotech	Level Transducer
PIT-004	PAL-004	10-PSI	Ashcroft	Pressure Indicating Trans.
PIT-004	PAH-004	75-PSI	Ashcroft	Pressure Indicating Trans.
LSH-004	LAH-004	1-IN	PLC	Level Switch
LIT-005	LAL-005	30-Ft	Geotech	Level Transducer
PIT-005	PAL-005	10-PSI	Ashcroft	Pressure Indicating Trans.
PIT-005	PAH-005	75-PSI	Ashcroft	Pressure Indicating Trans.
LSH-005	LAH-005	1-IN	PLC	Level Switch
LIT-006	LAL-006	30-Ft	Geotech	Level Transducer
PIT-006	PAL-006	10-PSI	Ashcroft	Pressure Indicating Trans.
PIT-006	PAH-006	75-PSI	Ashcroft	Pressure Indicating Trans.
LSH-006	LAH-006	1-IN	PLC	Level Switch
LSH-106	LAH-106	6-IN	PLC	Level Switch
LSHH-102	LAHH-102	60-IN	PLC	Level Switch
LSLL-102	LALL-102	10-IN	PLC	Level Switch
LIT-101	LAHH-101	50-IN	KPSI	Level Transducer
LIT-101	LALL-101	15-IN	KPSI	Level Transducer
FIT-101	FAL-101	10-GPM	Badger Meter	Flow Transmitter
PIT-102	PAHH-102	60-PSI	WIKA UniTrans	Pressure Transmitter
PIT-102	PAL-102	10-PSI	WIKA UniTrans	Pressure Transmitter
FIT-102	FAL-102	10-GPM	Badger Meter	Flow Transmitter
PSL-401	PAL-401	45-PSI	Dwyer	Pressure Switch
PIT-102 & PIT-104	PDAHH-101	50-IN	WIKA UniTrans	Pressure Transmitter
PIT-102 & PIT-104	PDAH-101	30-IN	WIKA UniTrans	Pressure Transmitter
PIT-104	PAHH-104	60-PSI	WIKA UniTrans	Pressure Transmitter
PIT-104	PAL-104	10-PSI	WIKA UniTrans	Pressure Transmitter
PIT-104 & PIT-105	PDAHH-102	50-IN	WIKA UniTrans	Pressure Transmitter
PIT-104 & PIT-105	PDAH-102	30-IN	WIKA UniTrans	Pressure Transmitter
PIT-105	PAHH-105	60-PSI	WIKA UniTrans	Pressure Transmitter
PIT-105	PAL-105	10-PSI	WIKA UniTrans	Pressure Transmitter
LSHH-202	LAHH-202	60-IN	PLC	Level Switch
LSLL-202	LALL-202	10-IN	PLC	Level Switch
LIT-201	LAHH-201	50-IN	KPSI	Level Transducer
LIT-201	LALL-201	15-IN	KPSI	Level Transducer
PIT-202	PAHH-202	90-PSI	WIKA UniTrans	Pressure Transmitter
PIT-202	PAL-202	10-PSI	WIKA UniTrans	Pressure Transmitter
FIT-201	FAL-201	10-GPM	Badger Meter	Flow Transmitter
FCV-202	FCV_202_ZAC	NA	VALBIA	Limit Switch
FCV-202	FCV_202_ZAC	NA	VALBIA	Limit Switch
PIT-301	PAHH-301	120-PSI	WIKA UniTrans	Pressure Indicating Trans.
PIT-301	PAH-301	80-PSI	WIKA UniTrans	Pressure Transmitter
PIT-301	PAL-301	10-PSI	WIKA UniTrans	Pressure Transmitter
AIT-301A	AILL-301A	2.0 ppm	HACH	DO Probe
AIT-301A	AIL-301A	5.1 ppm	HACH	DO Probe

PID DEVICE Tag Name	ALARM NAME	SET POINT	MANUFACTURER	TYPE OF INSTRUMENT
AIT-301B	AILL-301B	1.5-ppm	HACH	PH Probe
AIT-301B	AIL-301B	2.0-ppm	HACH	PH Probe
LSHH-302	LAHH-302	60-IN	PLC	Level Switch
LSLL-302	LALL-302	10-IN	PLC	Level Switch
LIT-303	LAHH-303	50-IN	KPSI	Level Transducer
LIT-303	LALL-303	15-IN	KPSI	Level Transducer
PIT-304	PAHH-304	50-PSI	WIKA UniTrans	Pressure Transmitter
PIT-304	PAH-304	40-PSI	WIKA UniTrans	Pressure Transmitter
FIT-301	FAL-301	10-GPM	Badger Meter	Flow Transmitter
LSHH-501	LAHH-501	9.5 - ft	PLC	Level Switch
LSLL-501	LALL-501	0.5 - ft	PLC	Level Switch
FIT-501	FAL-501	10-GPM	GF	Signet 2551 magmeter

Appendix C

Lockout/Tagout Procedure

Appendix D

HMI SOP

Main LPA HMI Screen PID-1

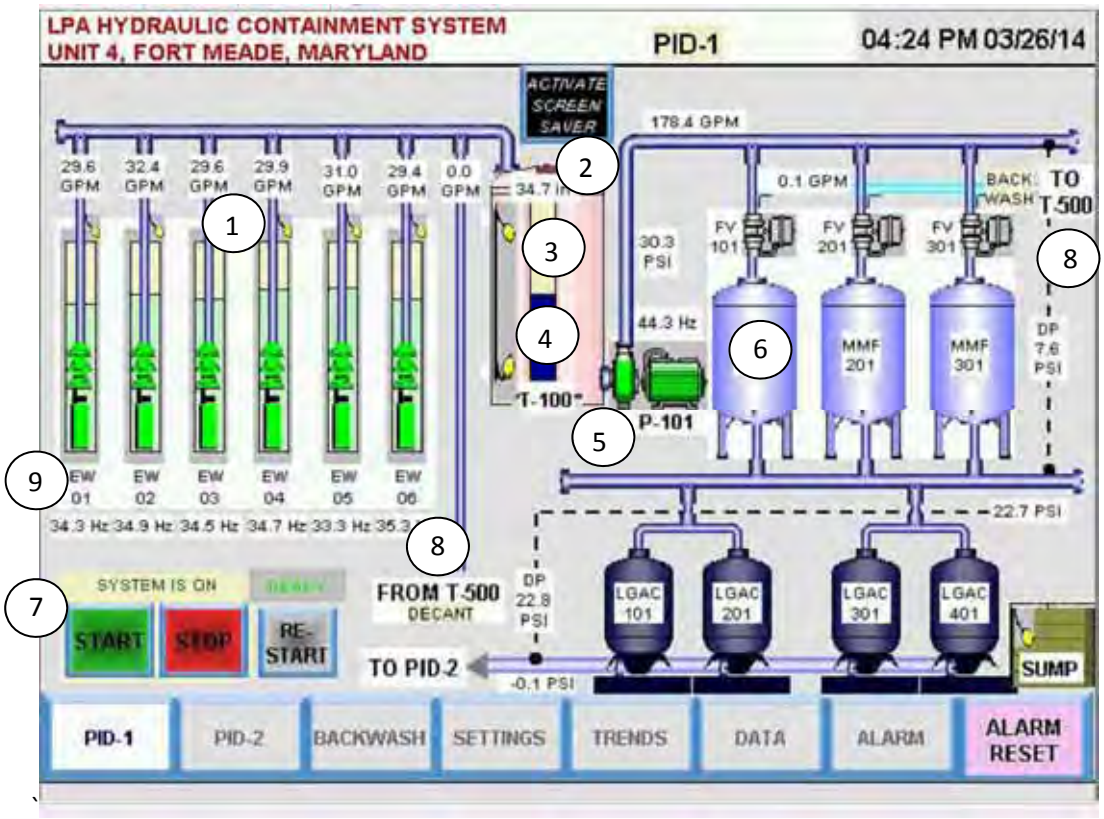

1. Push button to extraction well HOA controls and extraction well “On/Off” status.
2. Influent Tank Level (inches).
3. Influent Tank High-High Level Switch (Red = Water & Critical Alarm Shut-Down, Clear = No Water & No Alarm).
4. Influent Tank Low Level Switch (Green = Water, Clear = No Water & Stop Pump).
5. Push button to P-101 HOA controls and P-101 Pump “On/Off” status.
6. Push button to MMF controls and status.
7. System start/stop button.
8. Push button to Backwash screen.
9. VFD reading at extraction wells (Hz).

Extraction Wells Control Screen

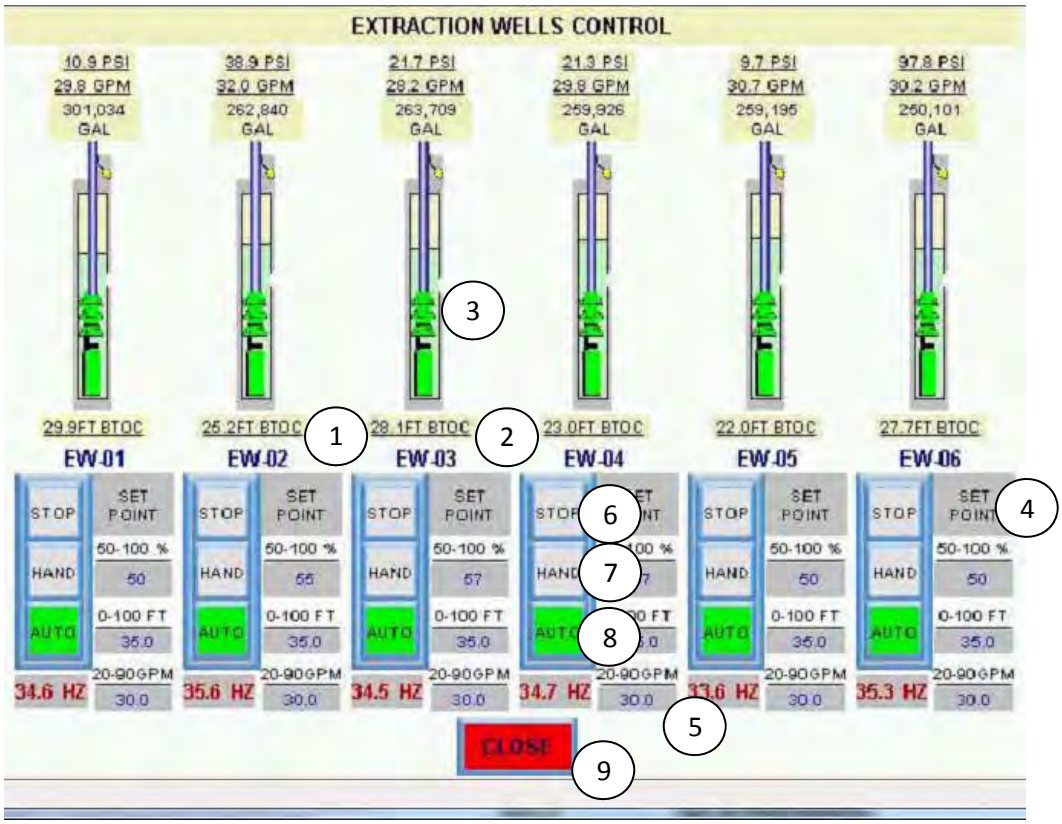

1. Extraction well name. All information below and above is status of extraction well.
2. Extraction well level below top of casing (BTOC).
3. Extraction well pump “On/Off” Status.
4. Extraction Well Water Level Hold Set-Point (FT BTOC)
5. Extraction Well VFD Speed (HZ)
6. Extraction Well “Hand”/”Off”/”Auto” (HOA) Status “Stop” Push Button. Red = “Stop”
7. Extraction Well “Hand”/”Off”/”Auto” (HOA) Status “Hand” Push Button. Green = “Hand”
8. Extraction Well “Hand”/”Off”/”Auto” (HOA) Status “Auto” Push Button. Green = “Auto”
9. Push Button to return to PID-1 HMI Screen

Pump P-101 Control Screen

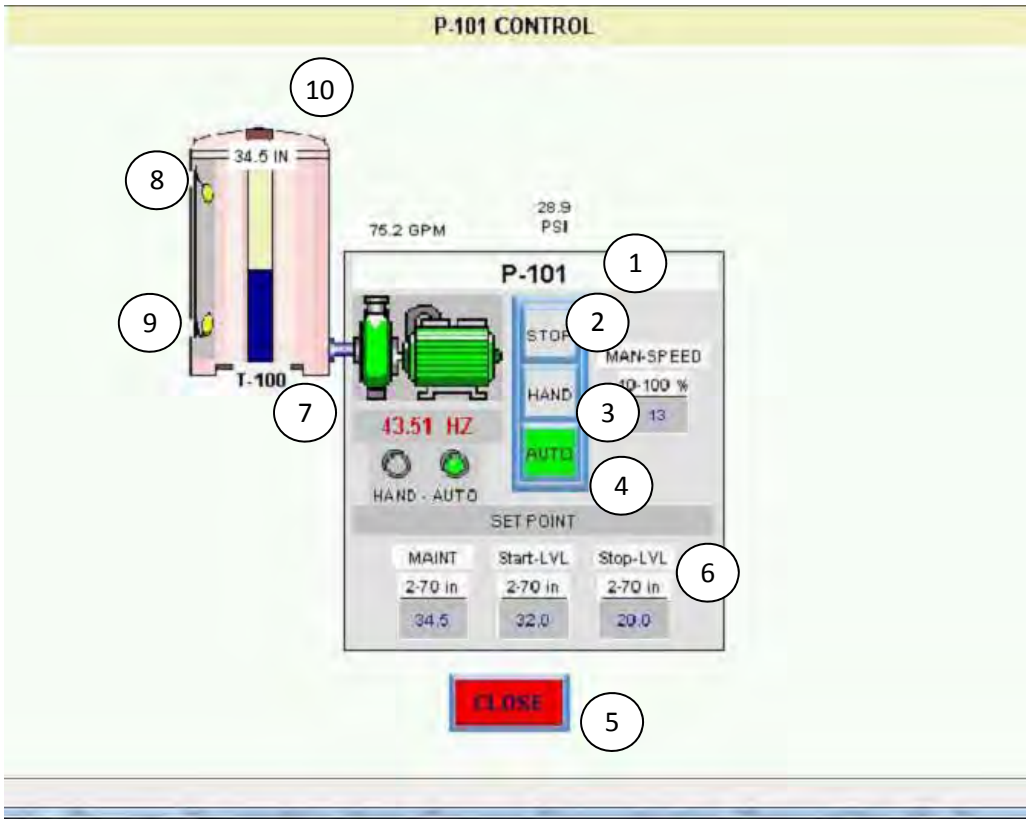

1. P-101 information and status.
2. P-101 “Hand”/”Off”/”Auto” (HOA) Status “Stop” Push Button. Red = “Stop”
3. P-101 “Hand”/”Off”/”Auto” (HOA) Status “Hand” Push Button. Green = “Hand”
4. P-101 “Hand”/”Off”/”Auto” (HOA) Status “Auto” Push Button. Green = “Auto”
5. Push Button to return to PID-1 HMI Screen.
6. P-101 start and stop water levels.
7. P-101 VFD speed (Hz).
8. Influent Tank High-High Level Switch (Red = Water & Critical Alarm Shut-Down, Clear = No Water & No Alarm).
9. Influent Tank Low Level Switch (Green = Water, Clear = No Water & Stop Pump).
10. Influent Tank Level (inches).

Main LPA HMI Screen PID-2

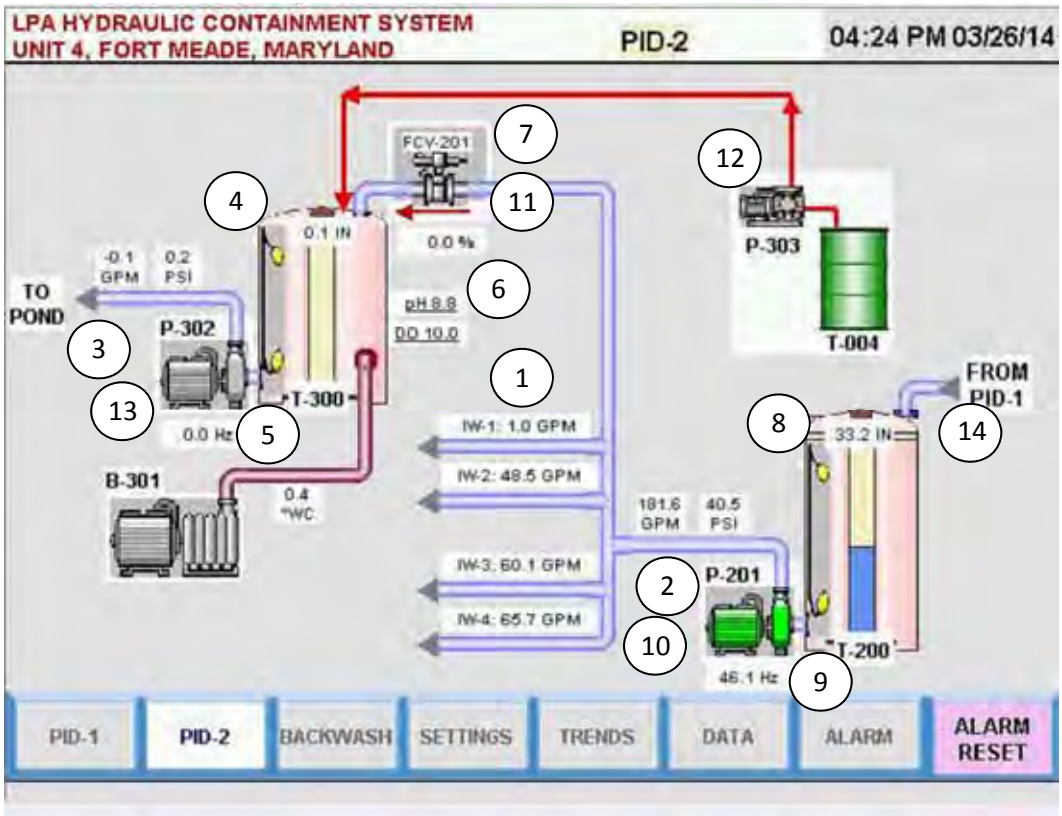

1. Injection well name and flow (gpm).
2. P-201 flow (gpm) and pressure (psi).
3. P-302 flow (gpm) and pressure (psi).
4. Adjustment Tank High-High Level Switch (Red = Water & Critical Alarm Shut-Down, Clear = No Water & No Alarm).
5. Adjustment Tank Low Level Switch (Green = Water, Clear = No Water & Stop Pump).
6. pH and DO (mg/L) conditions in T-300.
7. Flow control valve FCV-201 position.
8. Effluent Tank High-High Level Switch (Red = Water & Critical Alarm Shut-Down, Clear = No Water & No Alarm).
9. Effluent Tank Low Level Switch (Green = Water, Clear = No Water & Stop Pump).
10. Push button to P-101 HOA controls and P-101 Pump “On/Off” status.
11. Push button to FVC HOA controls.
12. Push button to P-303 HOA controls and P-101 Pump “On/Off” status.
13. Push button to P-302 HOA controls and P-101 Pump “On/Off” status.
14. Push button to return to HMI Screen PID-1.

Pump P-201 Control Screen

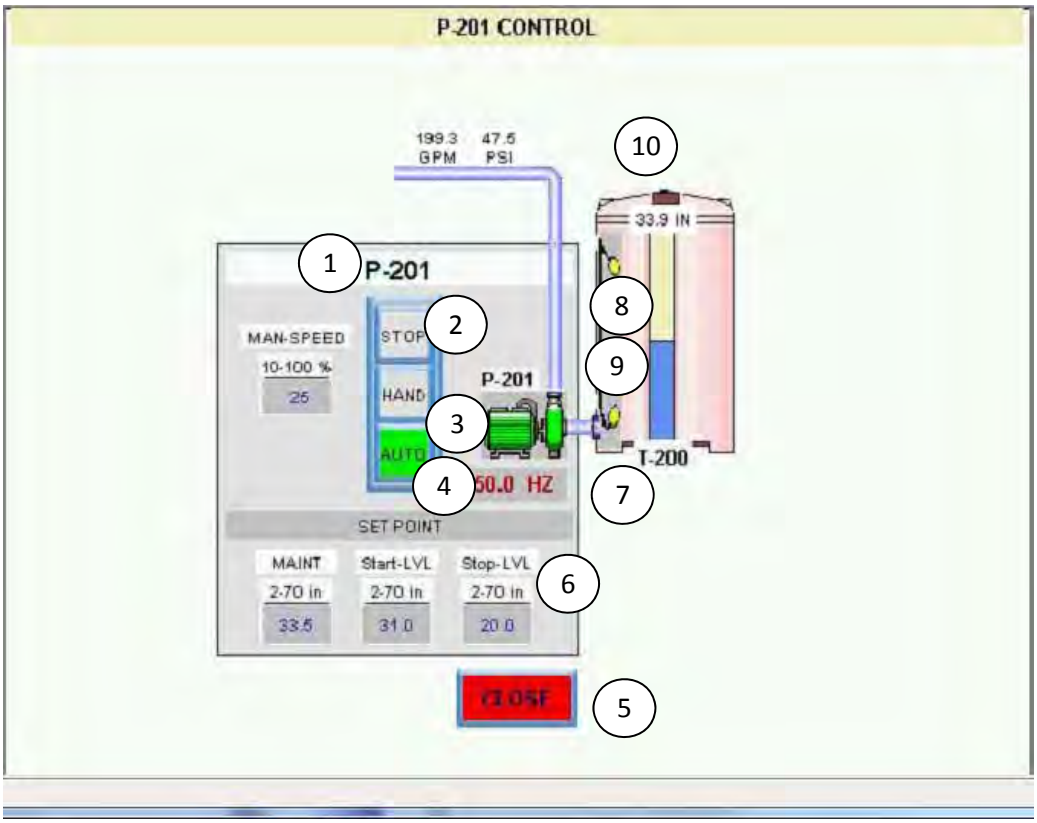

1. P-201 information and status.
2. P-201 “Hand”/”Off”/”Auto” (HOA) Status “Stop” Push Button. Red = “Stop”
3. P-201 “Hand”/”Off”/”Auto” (HOA) Status “Hand” Push Button. Green = “Hand”
4. P-201 “Hand”/”Off”/”Auto” (HOA) Status “Auto” Push Button. Green = “Auto”
5. Push Button to return to PID-1 HMI Screen.
6. P-201 start and stop water levels (in).
7. P-201 VFD speed (Hz).
8. Effluent Tank High-High Level Switch (Red = Water & Critical Alarm Shut-Down, Clear = No Water & No Alarm).
9. Effluent Tank Low Level Switch (Green = Water, Clear = No Water & Stop Pump).
10. Effluent Tank Level (inches).

Blower B-301 Control Screen

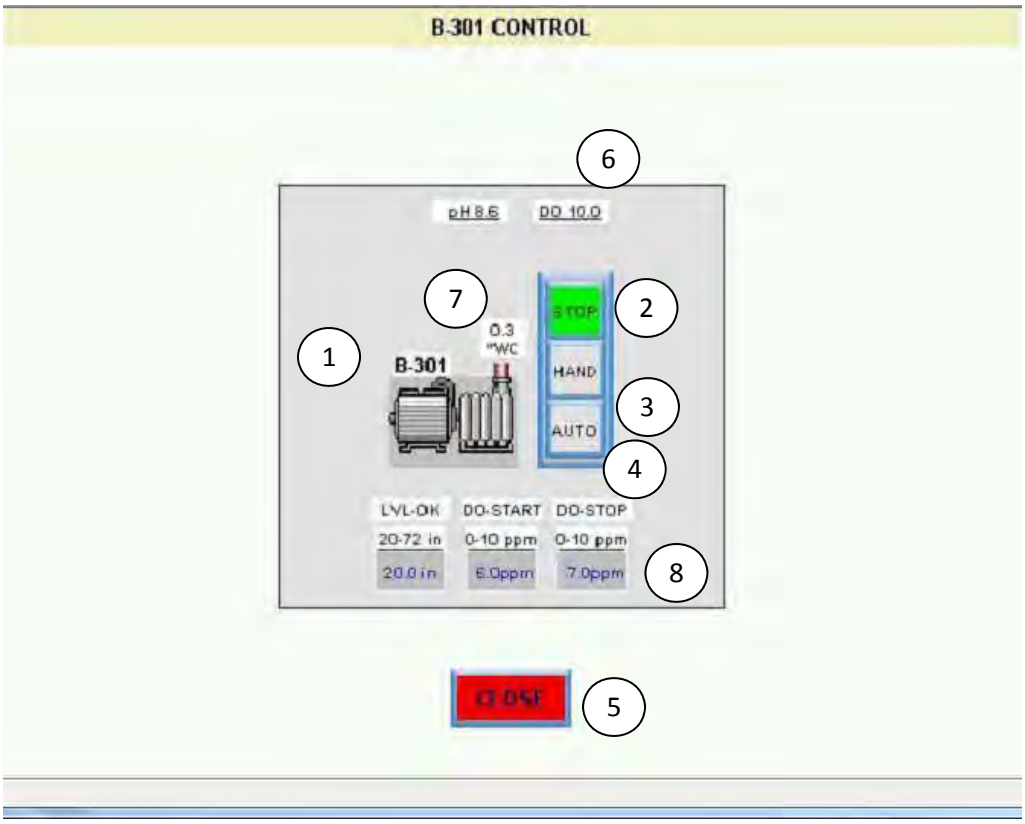

1. B-301 information and status.
2. P-201 “Hand”/”Off”/”Auto” (HOA) Status “Stop” Push Button. Red = “Stop”
3. P-201 “Hand”/”Off”/”Auto” (HOA) Status “Hand” Push Button. Green = “Hand”
4. P-201 “Hand”/”Off”/”Auto” (HOA) Status “Auto” Push Button. Green = “Auto”
5. Push Button to return to PID-1 HMI Screen.
6. pH and DO (mg/L) conditions in T-300.
7. Differential pressure at B-301 (inches water).
8. B-301 start and stop conditions (ppm dissolved oxygen).

Pump P-302 Control Screen

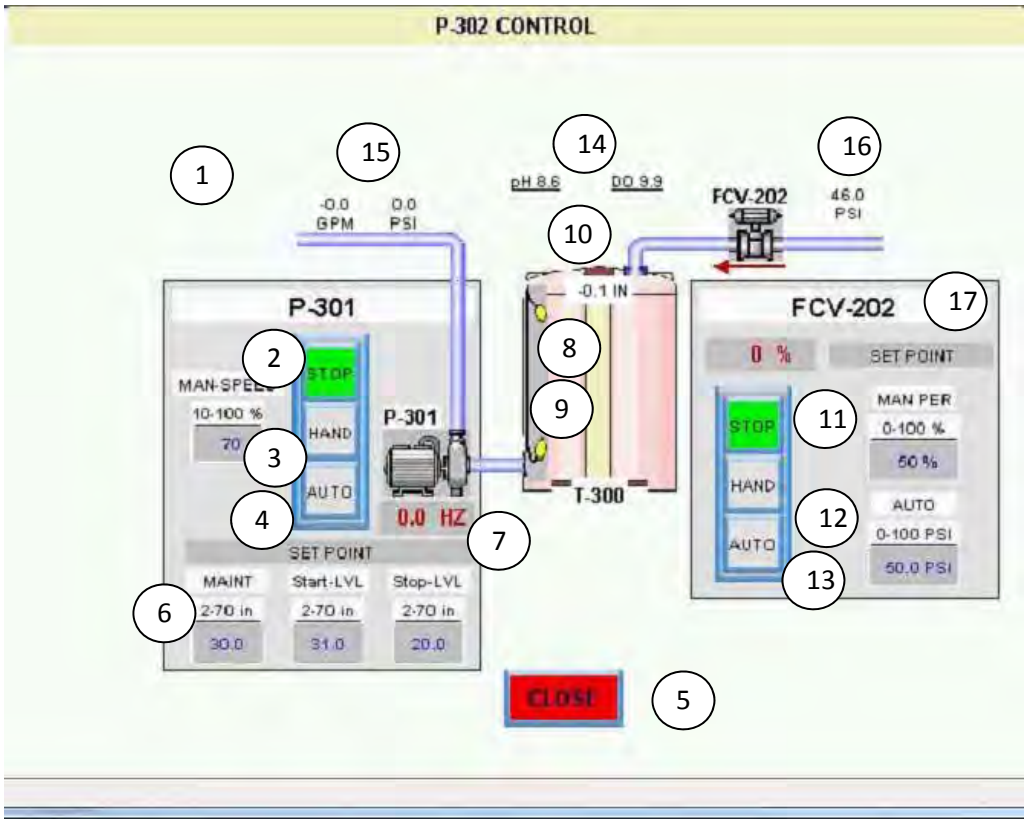

1. P-301 information and status.
2. P-301 “Hand”/”Off”/”Auto” (HOA) Status “Stop” Push Button. Red = “Stop”
3. P-301 “Hand”/”Off”/”Auto” (HOA) Status “Hand” Push Button. Green = “Hand”
4. P-301 “Hand”/”Off”/”Auto” (HOA) Status “Auto” Push Button. Green = “Auto”
5. Push Button to get Back to PID-1 HMI Screen.
6. P-301 start and stop water levels (in).
7. P-301 VFD speed (Hz).
8. Adjustment Tank High-High Level Switch (Red = Water & Critical Alarm Shut-Down, Clear = No Water & No Alarm).
9. Adjustment Tank Low Level Switch (Green = Water, Clear = No Water & Stop Pump).
10. Adjustment Tank Level (inches).
11. FCV-202 “Hand”/”Off”/”Auto” (HOA) Status “Stop” Push Button. Red = “Stop”
12. FCV-202 “Hand”/”Off”/”Auto” (HOA) Status “Hand” Push Button. Green = “Hand”
13. FCV-302 “Hand”/”Off”/”Auto” (HOA) Status “Auto” Push Button. Green = “Auto”
14. pH and DO (mg/L) conditions in T-300.
15. P-301 flow (gpm) and pressure (psi).
16. FCV-202 pressure (psi).
17. FCV-202 set point (% open).

Pump P-303 Control Screen

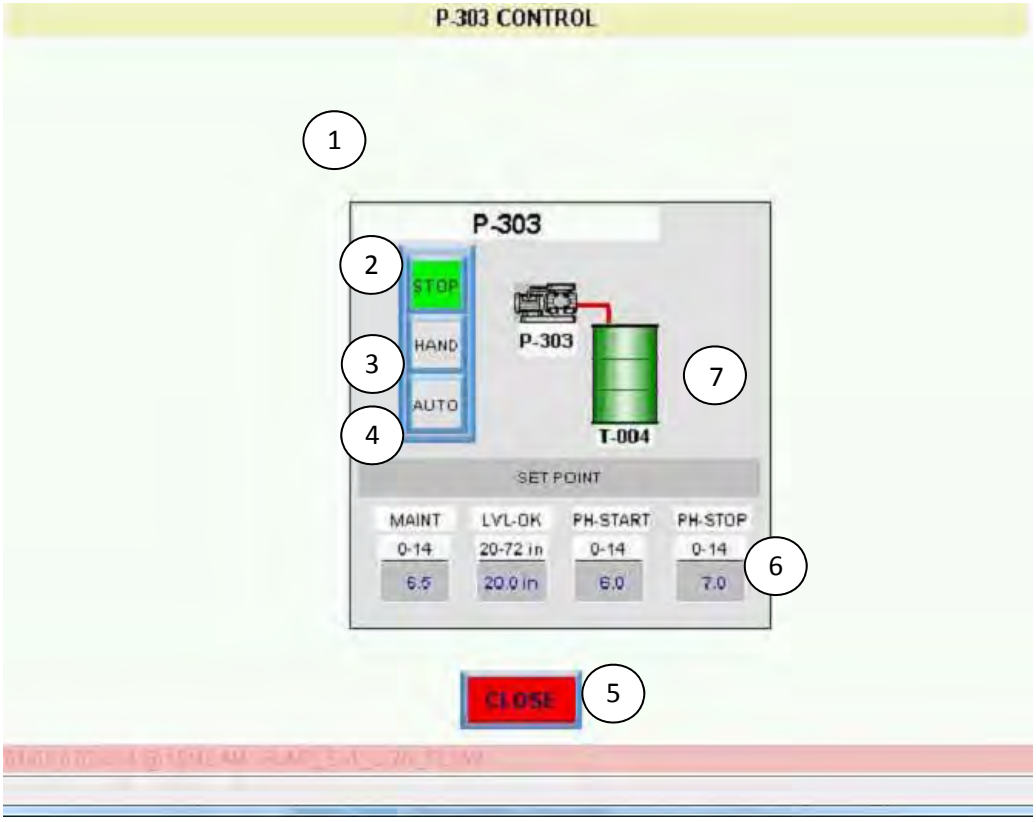

1. P-303 information and status.
2. P-303 “Hand”/”Off”/”Auto” (HOA) Status “Stop” Push Button. Red = “Stop”
3. P-303 “Hand”/”Off”/”Auto” (HOA) Status “Hand” Push Button. Green = “Hand”
4. P-303 “Hand”/”Off”/”Auto” (HOA) Status “Auto” Push Button. Green = “Auto”
5. Push button to return to PID-1 HMI Screen.
6. P-303 start and stop pH levels.
7. T-004 Chemical drum for balancing pH.

Tank T-500 Control Screen

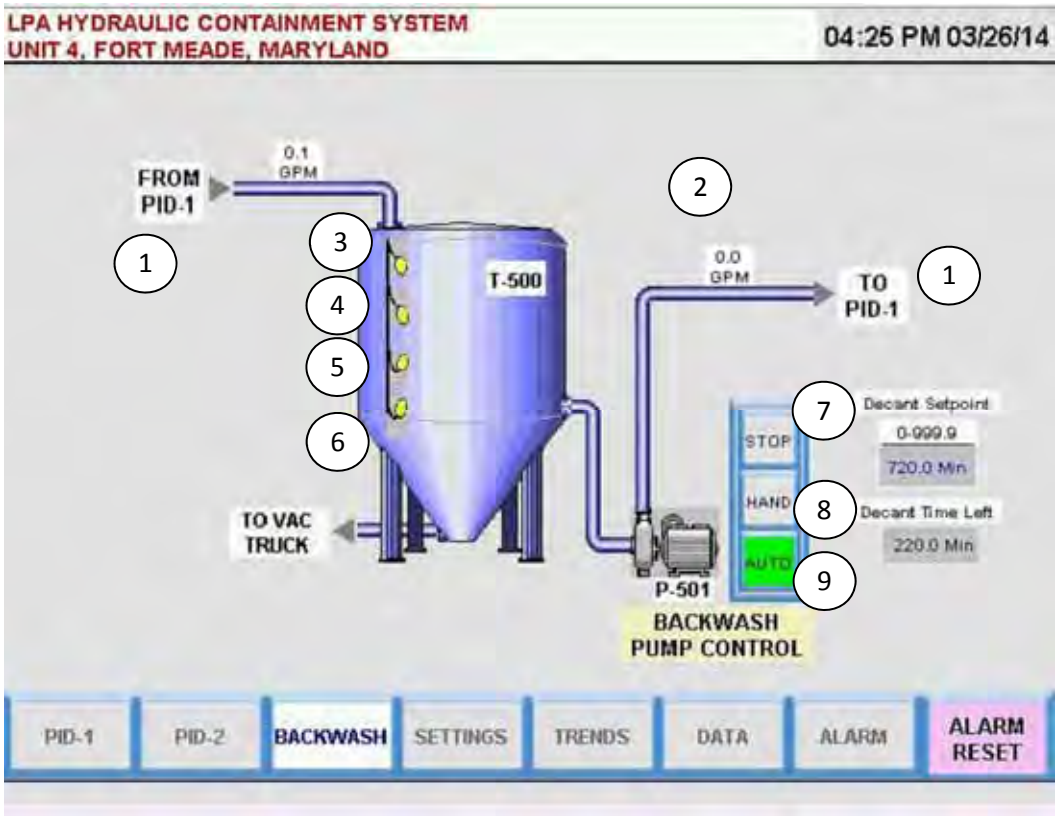

1. Push button to return to PID-1 HMI Screen.
2. Flow from P-501 (gpm).
3. Backwash Solids Settling Tank High-High Level Switch (Red = Water & Critical Alarm Shut-Down, Clear = No Water & No Alarm).
4. Backwash Solids Settling Tank High Level Switch (Red = Water & Critical Alarm Shut-Down, Clear = No Water & No Alarm).
5. Backwash Solids Settling Tank Low Level Switch (Green = Water, Clear = No Water & Stop Pump).
6. Backwash Solids Settling Tank Low-Low Level Switch (Green = Water, Clear = No Water & Stop Pump).
7. P-500 “Hand”/”Off”/”Auto” (HOA) Status “Stop” Push Button. Red = “Stop”
8. P-500 “Hand”/”Off”/”Auto” (HOA) Status “Hand” Push Button. Green = “Hand”
9. P-500 “Hand”/”Off”/”Auto” (HOA) Status “Auto” Push Button. Green = “Auto”

Settings Control Screen

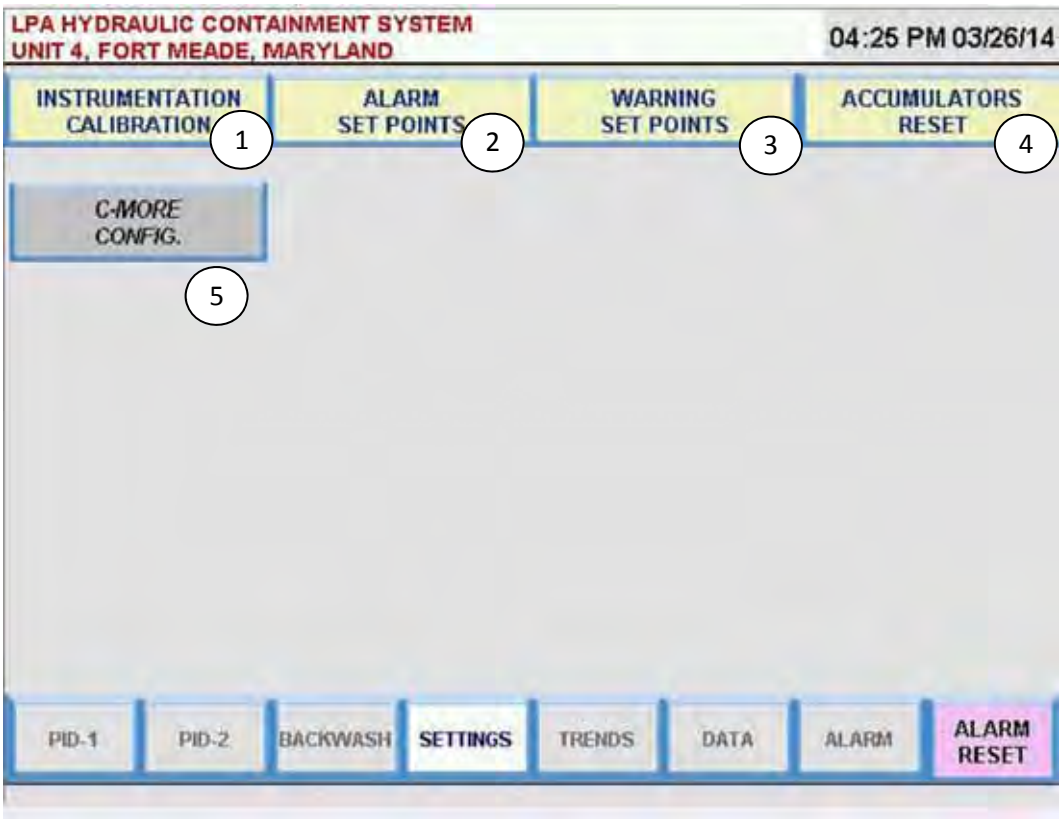

1. Instrumentation Calibration Screen – requires security access code.
2. Alarm Set Point Screen – requires security access code.
3. Warning Set Point Screen – requires security access code.
4. Accumulators Reset Screen – requires security access code.
5. Warning Set Point Screen – requires security access code.
6. C-More Configuration Screen – requires security access code.

Data Trends HMI Screen

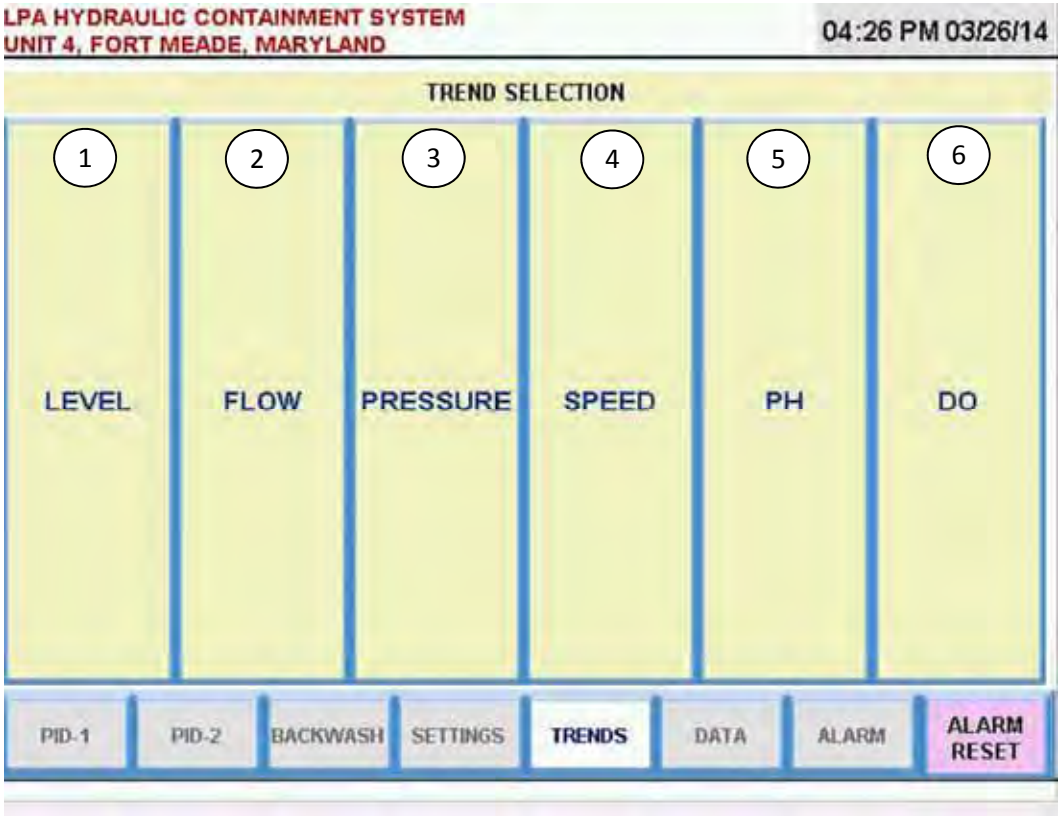

1. Extraction Well 1, 2, 3, 4, 5 & 6 water level trend screen.
2. LPA flow trend screen.
3. Pressure trend screen.
4. Extraction Well and P-101 VFD Speed trend screen.
5. pH trend screen.
6. Dissolved oxygen trend screen.

Data Trends HMI Screen

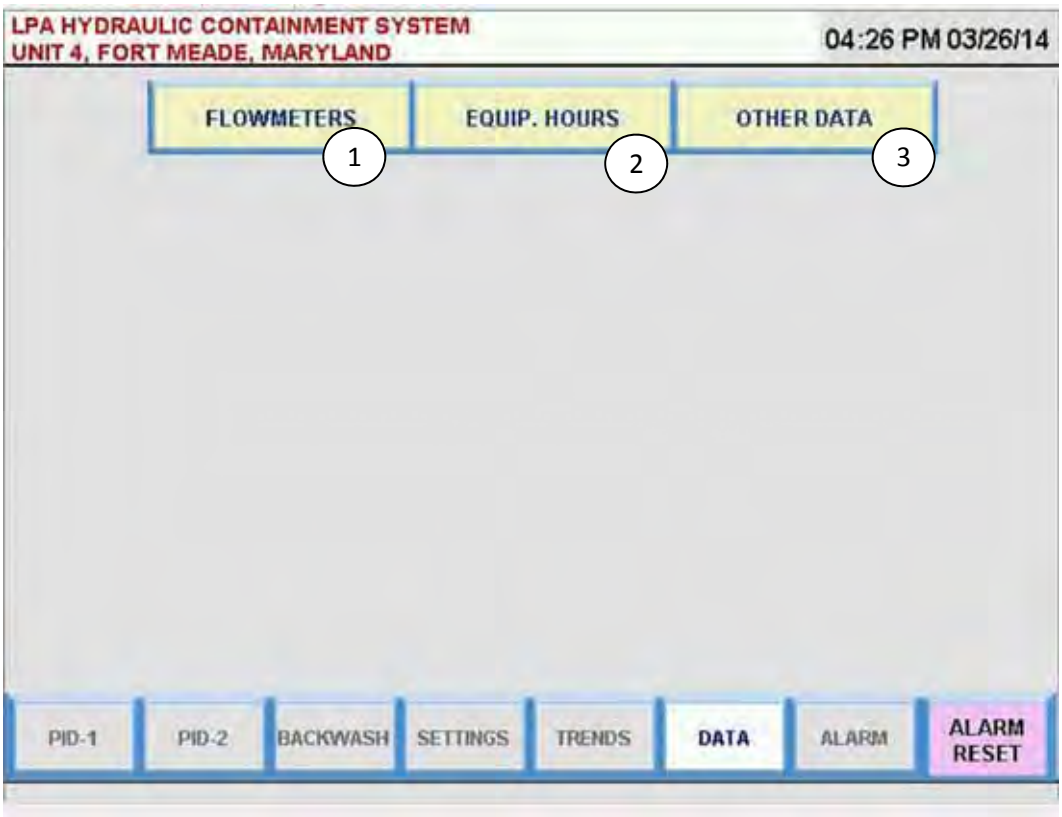

1. Flowmeter data HMI screen push button
2. Equipment hours data HMI screen push button.
3. Other data HMI screen push button

Flowmeter Data Screen

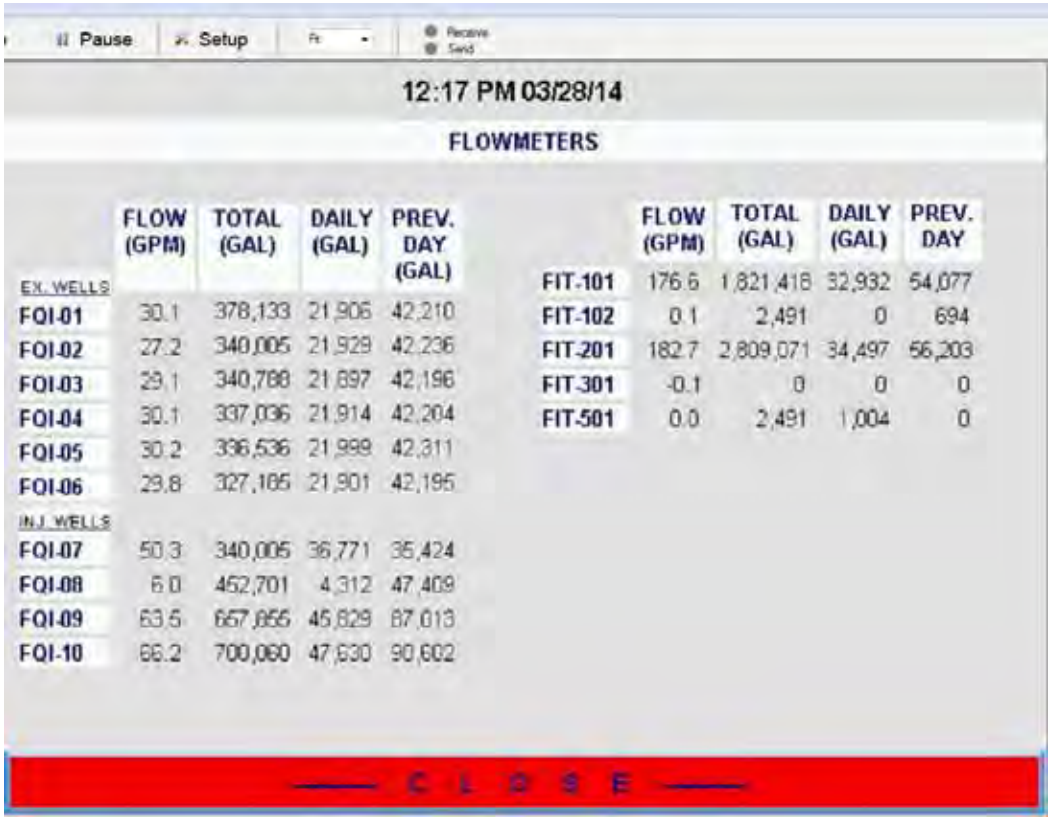

Pause | Setup

12:17 PM 03/28/14

FLOWMETERS

	FLOW (GPM)	TOTAL (GAL)	DAILY (GAL)	PREV. DAY (GAL)
EX. WELLS				
FQI-01	30.1	378,133	21,906	42,210
FQI-02	27.2	340,005	21,929	42,236
FQI-03	29.1	340,788	21,897	42,196
FQI-04	30.1	337,036	21,914	42,204
FQI-05	30.2	336,536	21,999	42,311
FQI-06	29.8	327,165	21,901	42,195
INJ WELLS				
FQI-07	50.3	340,005	36,771	35,424
FQI-08	6.0	452,701	4,312	47,409
FQI-09	63.5	657,855	45,829	87,013
FQI-10	66.2	700,060	47,630	90,602

	FLOW (GPM)	TOTAL (GAL)	DAILY (GAL)	PREV. DAY
FIT-101	176.6	1,821,418	32,932	54,077
FIT-102	0.1	2,491	0	694
FIT-201	182.7	2,809,071	34,497	56,203
FIT-301	-0.1	0	0	0
FIT-501	0.0	2,491	1,004	0

CLOSE

Equipment Hours Data Screen

Pause | Setup | Receive | Send

12:18 PM 03/28/14

EQUIP. HOURS

EX. WELLS	TOTAL (HRS)	DAILY (HRS)	PREV. DAY (HRS)
P-001	246.6	12.30	23.60
P-002	212.7	12.30	23.60
P-003	213.1	12.30	23.60
P-004	211.6	12.30	23.60
P-005	211.5	12.30	23.60
P-006	204.0	12.30	23.60
P-101	216.6	12.30	23.60
P-201	216.0	12.30	23.60
P-302	12.1	0.00	0.00
P-303	35.9	0.00	0.00
P-501	21.8	1.70	0.00
B-301	42.3	0.00	0.00

C L O S E

Other Data Screen

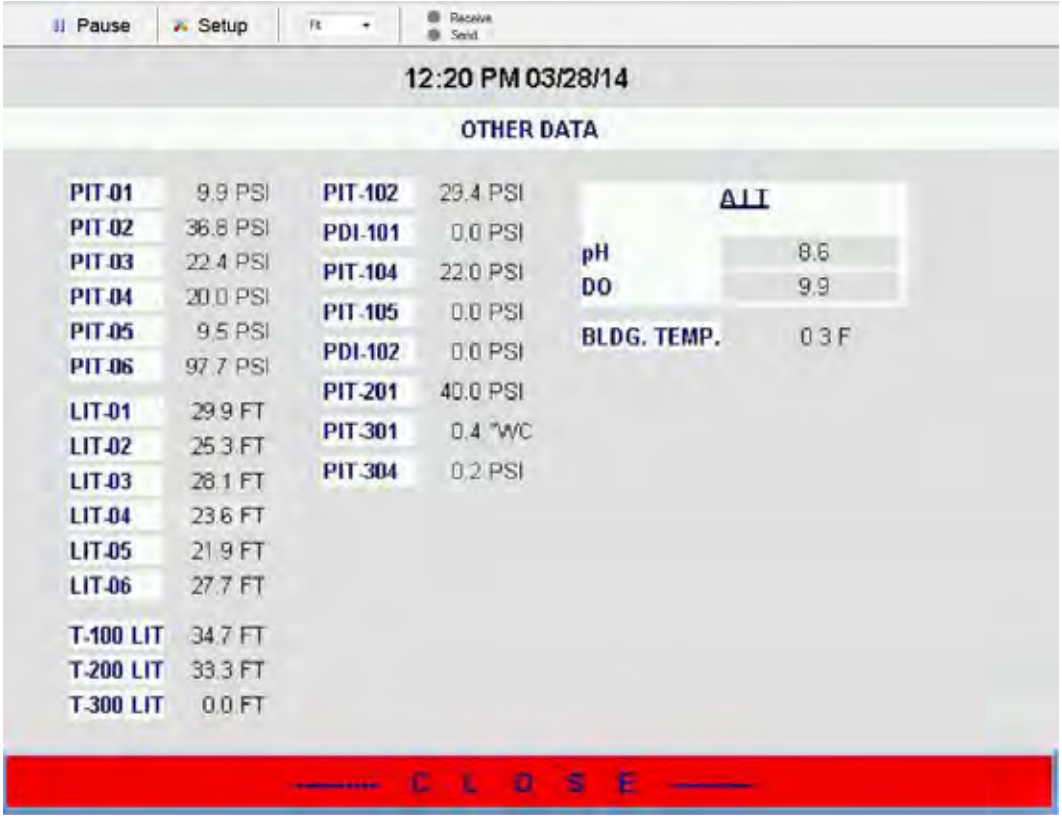

Alarm Screen

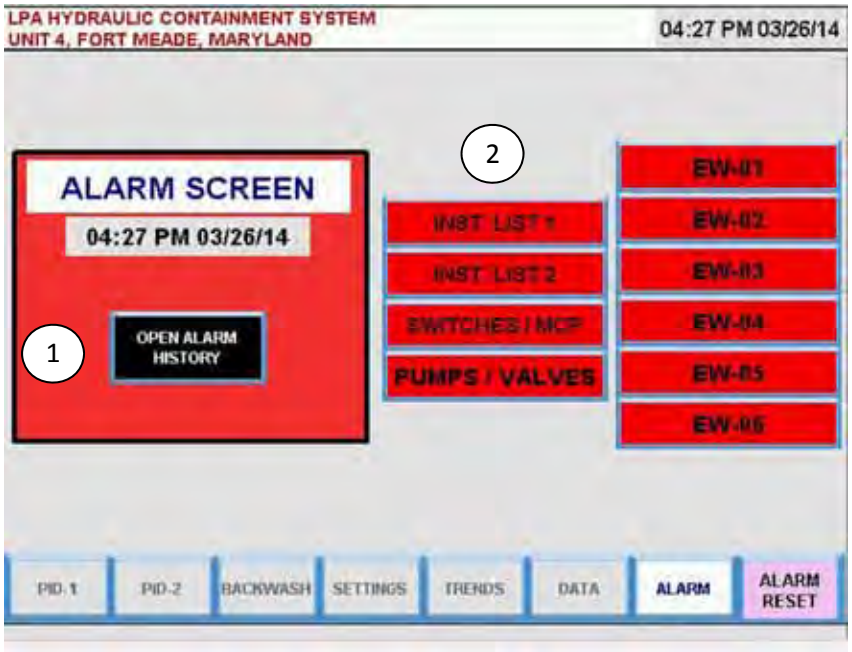

1. Push button to view LPA alarm history screen.
2. Push buttons to view status of alarms for instruments, switches, pumps,valves and extraction wells.

Appendix E

Initial Start-up Procedure

Table of Routine Maintenance Activities for Groundwater Recirculation System Fort Meade, Maryland			
Task	**Completed (Date/Initials)**	**Reference**	**Notes:**
Monthly			
Pipe Manifolds: 1. Check for leaks from pipes and fittings. Repair and replace as necessary 2. Record the injection line manifold pressure inside the building.			
Multi Media Filters: 1. Inspect for leaks. 2.. Check for trapped air by opening upper vent valve and allow small amount of liquid to flow out.			
LGAC Filters: 1. Inspect for leaks. 2. Confirm differential pressure is not elevated, if elevated, backwash carbon vessels as described in equipment manual. 3. Check for trapped air by opening upper vent valve and allowing a small amount of liquid to flow out. 4. Inspect discharge stream, if carbon is present in discharge stream shut down the system and contact the system Engineer.			
Dissolved Oxygen Sensor: Check Dissolved Oxygen Sensor Cap for solids build up and bio-fouling, check sensor body for buildup. If sensor cap observed to be fouled. 1. Leave the cam and nose cone on the sensor. 2.Rinse the sensor with clean water from a squirt bottle or spray bottle. 3. Gently wipe with a soft-bristled brush or soft cloth if bio fouling is present. Use Alconox® to remove grease. 4. If extensive fouling or mineral build-up is present, soak the cap end in vinegar for 15 min., then soak in deionized water for 15 min. If sensor body observed to be fouled clean with a soft brush and alconox, if mineral deposits or extensive fouling is observed than soak in vinegar and DI			
pH Sensor: 1. Check pH Sensor Cap for solids build up and fouling, check sensor body for buildup. 2. Replace pH electrode salt bridge as necessary			
Pumps: 1. Inspect for leaks. 2. Confirm inlet pressure is below Engineers recommendation			
Chemical Drum: 1. Inspect for leaks. 2. Inspect and inventory site spill kit to ensure proper supplies are available			

Table of Routine Maintenance Activities for Groundwater Recirculation System Fort Meade, Maryland			
Task	**Completed (Date/Initials)**	**Reference**	**Notes:**
LGAC Samples: 1. Collect total Influent/Effluent VOC GW samples. Sample IDs are: GWTSINF(date)/GWTSEFF(date) 2. Collect influent/effluent VOC samples from each lag vessel (201 and 401) sample IDs are: LGAC201INF(date) / LGAC201EFF(date) LGAC401INF(date) / LGAC401EFF(date)			

Table of Routine Maintenance Activities for Groundwater Recirculation System Fort Meade, Maryland			
Task	**Completed (Date/Initials)**	**Reference**	**Notes:**
NPDES Surface Water Compliance: If actively discharging to surface water collect NPDES samples in accordance with parameters detailed in the IRAWP. Record field parameters on meter in treatment building (pH, Dissolved Oxygen, Temp (mg/L).			pH - DO - Temp -
EW Wells (EW01-EW06): Open man hole at each EW well, remove water from vault to surface with sump pump, inspect the inside of vault for leaks			
IW Wells (IW01-IW04): Open man hole at each IW well, remove water from vault to surface with sump pump, inspect the inside of vault for leaks, gauge shallow stilling wells. Record Well-head PSI at all injection well locations.			
Transducer downloads: Download transducer data at each IW well with software on labtop.			
Photos: Photo document site restoration areas and BMPs (silt fences), and note any signifigant change or issues.			
Blower: The inlet air filter should be checked monthly and cleaned as necessary.			
pH Sensor: Verify electrodes are clean if deposits or solids build up clean electrodes with soft cloth and mild detergent. Replace salt bridge as necessary			
Data download from C-More to a Flash Drive.			
Chemical Metering Pumps: 1. Inspect Pumps and confirm proper operation, 2. Inspect injection check valve, 3. If equipped with relief tubing and multi-function valve, don face mask, and 1/4 turn the black knob on the valve. The discharge line is now depressurized. Keep valve open until solution drains back down the discharge tubing into solution drum or tank. Then 1/4 turn knob to normal position.			

Table of Routine Maintenance Activities for Groundwater Recirculation System Fort Meade, Maryland			
Task	**Completed (Date/Initials)**	**Reference**	**Notes:**
Quarterly			
Solenoid and Motorized Valves: 1. Inspect and confirm correct operation.			
Backwash Tank: Determine the volume of "sludge" in the backwash tank using the "sludge judge" bailer from the top of the tank. Record volume.			
Blower: The belt should be inspected for alignment and tightness quarterly. If the belt appears worn, it shall be replaced with a belt that is within the manufacturers tolerances. All screws and bolts should be inspected quarterly to ensure blower vibration has not caused them to loosen.			
Flow Meters: Confirm internal screens are clear and free of debris, remove and flush as necessary.			
Level Switches: Confirm there is no solids build up and floats can move freely. Confirm that activated alarms function when switched.			
Pressure Transducers: Confirm pressure transmitters are still calibrated within specifications. Send transducers out for calibration if needed.			
Air Compressor: 1. Change crankcase oil (oil should be changed every 500 operating hours). See manual for details on oil specifications. 2. Check entire system for air leakage around fittings, connections, and gaskets, using soap solution and brush. 3. Tighten nuts and cap screws as required. 4. Check and clean compressor valves, replace springs, discs, and seats if worn or damaged. 5. Pull ring on all pressure relief valves to assure proper operation.			

Table of Routine Maintenance Activities for Groundwater Recirculation System Fort Meade, Maryland			
Task	**Completed (Date/Initials)**	**Reference**	**Notes:**
Semi-Annually			
Flowmeters: 1. Inspect cable connections on terminal strips and terminal blocks. Verify that terminal connections are tight and physically sound with no sign of corrosion. 2. Verify that the moisture barriers and seals protecting the electronics in the local enclosure is adequate and that no moisture is entering the enclosure. 3. Verify that all seals are performing properly and that there is no leakage of the process media. Check for deterioration of the gaskets and environmental seals used. 4. Remove the flow element for inspection based on historical evidence of debris, foreign matter, or scale build-up and appropriate plant shutdown schedules and procedures. Check for corrosion, stress cracking, and/or build-up of oxides, salts, or foreign substances. The thermowells must be free of excessive contaminants and be physically intact. Any debris or residue build-up could cause inaccurate flow indication. Clean the flow element, as necessary, with a soft brush			
Annually			
Blower: The blower fan wheel should be checked annually for any wear, corrosion or buildup of material. The wheel should be cleaned or replaced as required. The coupling of the direct drive unit should be lubricated and checked for alignment annually. The bearings should be lubricated but caution should be taken to prevent excessive lubrication.			
Chemical Metering Pumps: 1. Use Proper PPE and replace pump diaphragm and associated parts - refer to Instruction Manual.			
Flowmeter: Verify flowmeter is still calibrated properly. Send meter to be recalibrated if needed.			
Safety Equipment Checklist			
* Please check the following safety equipment's onsite if available.			
- Eye wash	expired (Y / N)		
- Fire extinguishers	Monthly inspection complete & tag initialed? (Y/ B)		
	Last yearly inspection?		
- First aid kit	expired (Y / N)		

Table of Routine Maintenance Activities for Groundwater Recirculation System Fort Meade, Maryland			
Task	**Completed (Date/Initials)**	**Reference**	**Notes:**
Monthly			
Pipe Manifolds: 1. Check for leaks from pipes and fittings. Repair and replace as necessary 2. Record the injection line manifold pressure inside the building.			
Multi Media Filters: 1. Inspect for leaks. 2.. Check for trapped air by opening upper vent valve and allow small amount of liquid to flow out.			
LGAC Filters: 1. Inspect for leaks. 2. Confirm differential pressure is not elevated, if elevated, backwash carbon vessels as described in equipment manual. 3. Check for trapped air by opening upper vent valve and allowing a small amount of liquid to flow out. 4. Inspect discharge stream, if carbon is present in discharge stream shut down the system and contact the system Engineer.			
Dissolved Oxygen Sensor: Check Dissolved Oxygen Sensor Cap for solids build up and bio-fouling, check sensor body for buildup. If sensor cap observed to be fouled. 1. Leave the cam and nose cone on the sensor. 2.Rinse the sensor with clean water from a squirt bottle or spray bottle. 3. Gently wipe with a soft-bristled brush or soft cloth if bio fouling is present. Use Alconox® to remove grease. 4. If extensive fouling or mineral build-up is present, soak the cap end in vinegar for 15 min., then soak in deionized water for 15 min. If sensor body observed to be fouled clean with a soft brush and alconox, if mineral deposits or extensive fouling is observed than soak in vinegar and DI			
pH Sensor: 1. Check pH Sensor Cap for solids build up and fouling, check sensor body for buildup. 2. Replace pH electrode salt bridge as necessary			
Pumps: 1. Inspect for leaks. 2. Confirm inlet pressure is below Engineers recommendation			
Chemical Drum: 1. Inspect for leaks. 2. Inspect and inventory site spill kit to ensure proper supplies are available			

Table of Routine Maintenance Activities for Groundwater Recirculation System Fort Meade, Maryland			
Task	**Completed (Date/Initials)**	**Reference**	**Notes:**
LGAC Samples: 1. Collect total Influent/Effluent VOC GW samples. Sample IDs are: GWTSINF(date)/GWTSEFF(date) 2. Collect influent/effluent VOC samples from each lag vessel (201 and 401) sample IDs are: LGAC201INF(date) / LGAC201EFF(date) LGAC401INF(date) / LGAC401EFF(date)			

Table of Routine Maintenance Activities for Groundwater Recirculation System Fort Meade, Maryland			
Task	**Completed (Date/Initials)**	**Reference**	**Notes:**
NPDES Surface Water Compliance: If actively discharging to surface water collect NPDES samples in accordance with parameters detailed in the IRAWP. Record field parameters on meter in treatment building (pH, Dissolved Oxygen, Temp (mg/L).			pH - DO - Temp -
EW Wells (EW01-EW06): Open man hole at each EW well, remove water from vault to surface with sump pump, inspect the inside of vault for leaks			
IW Wells (IW01-IW04): Open man hole at each IW well, remove water from vault to surface with sump pump, inspect the inside of vault for leaks, gauge shallow stilling wells. Record Well-head PSI at all injection well locations.			
Transducer downloads: Download transducer data at each IW well with software on labtop.			
Photos: Photo document site restoration areas and BMPs (silt fences), and note any signifigant change or issues.			
Blower: The inlet air filter should be checked monthly and cleaned as necessary.			
pH Sensor: Verify electrodes are clean if deposits or solids build up clean electrodes with soft cloth and mild detergent. Replace salt bridge as necessary			
Data download from C-More to a Flash Drive.			
Chemical Metering Pumps: 1. Inspect Pumps and confirm proper operation, 2. Inspect injection check valve, 3. If equipped with relief tubing and multi-function valve, don face mask, and 1/4 turn the black knob on the valve. The discharge line is now depressurized. Keep valve open until solution drains back down the discharge tubing into solution drum or tank. Then 1/4 turn knob to normal position.			

Table of Routine Maintenance Activities for Groundwater Recirculation System Fort Meade, Maryland			
Task	**Completed (Date/Initials)**	**Reference**	**Notes:**
Quarterly			
Solenoid and Motorized Valves: 1. Inspect and confirm correct operation.			
Backwash Tank: Determine the volume of "sludge" in the backwash tank using the "sludge judge" bailer from the top of the tank. Record volume.			
Blower: The belt should be inspected for alignment and tightness quarterly. If the belt appears worn, it shall be replaced with a belt that is within the manufacturers tolerances. All screws and bolts should be inspected quarterly to ensure blower vibration has not caused them to loosen.			
Flow Meters: Confirm internal screens are clear and free of debris, remove and flush as necessary.			
Level Switches: Confirm there is no solids build up and floats can move freely. Confirm that activated alarms function when switched.			
Pressure Transducers: Confirm pressure transmitters are still calibrated within specifications. Send transducers out for calibration if needed.			
Air Compressor: 1. Change crankcase oil (oil should be changed every 500 operating hours). See manual for details on oil specifications. 2. Check entire system for air leakage around fittings, connections, and gaskets, using soap solution and brush. 3. Tighten nuts and cap screws as required. 4. Check and clean compressor valves, replace springs, discs, and seats if worn or damaged. 5. Pull ring on all pressure relief valves to assure proper operation.			

Table of Routine Maintenance Activities for Groundwater Recirculation System Fort Meade, Maryland			
Task	**Completed (Date/Initials)**	**Reference**	**Notes:**
Semi-Annually			
Monitoring Well Gauging: 1. Gauge monitoring wells included in the semi-annual monitoring program.			
Flowmeters: 1. Inspect cable connections on terminal strips and terminal blocks. Verify that terminal connections are tight and physically sound with no sign of corrosion. 2. Verify that the moisture barriers and seals protecting the electronics in the local enclosure is adequate and that no moisture is entering the enclosure. 3. Verify that all seals are performing properly and that there is no leakage of the process media. Check for deterioration of the gaskets and environmental seals used. 4. Remove the flow element for inspection based on historical evidence of debris, foreign matter, or scale build-up and appropriate plant shutdown schedules and procedures. Check for corrosion, stress cracking, and/or build-up of oxides, salts, or foreign substances. The thermowells must be free of excessive contaminants and be physically intact. Any debris or residue build-up could cause inaccurate flow indication. Clean the flow element, as necessary, with a soft brush			
Annually			
Blower: The blower fan wheel should be checked annually for any wear, corrosion or buildup of material. The wheel should be cleaned or replaced as required. The coupling of the direct drive unit should be lubricated and checked for alignment annually. The bearings should be lubricated but caution should be taken to prevent excessive lubrication.			
Chemical Metering Pumps: 1. Use Proper PPE and replace pump diaphragm and associated parts - refer to Instruction Manual.			
Flowmeter: Verify flowmeter is still calibrated properly. Send meter to be recalibrated if needed.			
Safety Equipment Checklist			
* Please check the following safety equipment's onsite if available.			
- Eye wash	expired (Y / N)		
- Fire extinguishers	Monthly inspection complete & tag initialed? (Y/ B)		
	Last yearly inspection?		
- First aid kit	expired (Y / N)		

Appendix F

Technical Note 802 – Leak Testing of Polyehtylene Pipe for Municipal and Industrial Applications

Appendix G

Hydraulic Containment System
Bio-fouling Management Plan

ARCADIS U.S., Inc.
1114 Benfield Boulevard
Suite A
Millersville
Maryland 21108
Tel 410 987 0032
Fax 410 987 4392
www.arcadis-us.com

ENVIRONMENT

Ms. Elisabeth Green, Ph.D.
Federal Facilities Division Land Restoration Program
Maryland Department of the Environment
1800 Washington Boulevard, Suite 625
Baltimore, Maryland 21230

Subject:
Hydraulic Containment System Bio-fouling Management Plan
Operable Unit 4 – Lower Patapsco Aquifer
Fort George G. Meade, Maryland

Date:
22 July 2014

Contact:
Tim Llewellyn

Phone:
410.923.7828

Email:
Tim.Llewellyn@arcadis-us.com

Our ref:
GP09MEAD.OU41

Dear Ms. Green:

ARCADIS U.S., Inc. (ARCADIS) has been retained by the U.S. Army Environmental Command (the Army) to perform Installation Restoration Program activities at Fort George G. Meade (FGGM), Maryland. The work summarized in this letter is being conducted under Performance Based Acquisition number W91ZLK-05-D-0015 awarded to ARCADIS in August 2009.

Since March 20, 2014, ARCADIS, on behalf of the Army, has been operating the Lower Patapsco Aquifer (LPA) Hydraulic Containment (HC) groundwater treatment system described in the approved Interim Removal Action Work Plan (IRAWP) (ARCADIS, 2013). The HC system consists of a series of extraction and injection wells and a groundwater treatment building. Based upon previous experience with similar systems, there is potential for fouling (inorganic precipitates and/or biologic slime) within the injection wells which could affect system efficiency and effectiveness.

The Army is requesting advance approval to use several approaches as part of an injection well maintenance program to minimize or prevent bio-fouling in the injection wells and/or groundwater treatment system. Prior experience indicates that several approaches may be needed during the lifecycle of the system to address the variety of bacteria and precipitates that may be encountered. Once fouling is observed in an injection well, the specific capacity can diminish rapidly (i.e., within days). For this reason preventative measures with occasional mechanical and/or chemical well rehabilitation may be needed during the operation and maintenance of the LPA HC

system. A specific capacity loss of at least 15 percent of baseline based on tracking flow rates and transducer readings will trigger action.

Table 1 summarizes chemical additives which may be used during operation and maintenance of the LPA HC treatment system. In the event fouling occurs or a preventative course of treatment is planned, email notice will be provided to MDE and EPA to document the specific course of action and chemical treatment that will be utilized. If conditions warrant other approaches not detailed in this letter, then a more detailed plan would be provided and work would be scheduled pending MDE and EPA concurrence.

Table 1. Bio-Fouling Treatment Options

Possible Corrective Measures	Optional Treatments/ Additives	Notes
Mechanical agitation	May include surging, water jetting, scrubbing, and pumping the injection well.	To be used periodically as preventative maintenance in conjunction with other chemical additives listed below. Also may be used to rehabilitate a well to remedy extensive fouling.
pH adjustment – acid	Acetic acid, Citric acid, hydrochloric acid, oxalic acid, glycolic acid or NuWell 120 (MSDS attached)	Acidification would be used to solubilize minerals and certain biological species.
pH adjustment - base	sodium hydroxide, hydrogen peroxide	May be used if alkaline conditions are needed to address certain bacteria or as a follow-on treatment to acidification.
Biocide treatment	NuWell 310 (MSDS attached)	This product would be used to break down biofilm and disperse mineral salts. It may be applied both as a preventative measure and following mechanical well rehabilitation.

Four injection wells (IW-1 to IW-4) displayed on **Figure 1**, will likely require periodic treatment through a regular maintenance program including mechanical agitation

followed by chemical application when warranted. During mechanical scrubbing maintenance events, down-well equipment and infrastructure will be removed from the well prior to brushing, surging, and purging the well to remove any inorganic precipitates and bacteriological slime accumulation. It is anticipated this will be completed proactively on a semi-annual or annual basis, and/or following periods of extensive fouling.

After mechanical rehabilitation, the appropriate product (see Table 1) will be introduced to the well based the observed type of fouling. Volumes will be tailored based on the specific product used, manufacturer recommendations where applicable, and well-specific characteristics and construction specifications to ensure adequate dosing limited to the screen interval and filter-pack materials. Product selection and application will factor in handling safety, compatibility with well materials and down-well components, and the potential for vapor generation within the injection well.

Following introduction of an additive, the system will remain shut down for approximately 24 hours to allow for sufficient treatment. The injection well will then be surged and pumped again. It is anticipated the majority of chemicals added will be removed from the injection well during the final pumping stage and handled in accordance with the FGGM Waste Management Plan (ARCADIS, 2011). This proactive fouling treatment will be completed periodically as needed based on injection well performance during system operation. Additionally, occasional proactive dosings (e.g., monthly or quarterly) may be completed during which the selected treatment product is introduced to the well (without mechanical agitation) and allowed to sit in the well for one day to treat the screened interval and filter pack materials, before resuming regular system operation.

All well treatment and rehabilitation measures will be detailed in each quarterly and annual monitoring report along with other operation and maintenance activities.

Should you have any questions regarding the planned activities, please contact Mr. George Knight at 301-677-7999 or the undersigned at 410-987-0032, at your earliest convenience.

Sincerely,

ARCADIS U.S., Inc.

Tim Llewellyn
Project Manager

Figures:

Figure 1 – Lower Patapsco Aquifer Study Area Layout

References

ARCADIS. 2011. Waste Management Plan for the Performance Based Acquisition at Fort Meade. April 2011.

ARCADIS. 2013. Final Interim Removal Action Work Plan for Operable Unit 4, Fort George G. Meade, Maryland. December 2013.

Appendix H

Wetland Impact Plate (Provided on CD)

LEGEND:

- FINAL LPA WELL LOCATION
- LOWER PATAPSCO AQUIFER WELL
- PIPE CLEANOUT LOCATION
- WORK AREA
- SUBSURFACE PIPING
- ROADS
- TEMPORARY 25 FT WETLAND BUFFER IMPACT 0.035 AC / 1,527 SF
- JURISDICTIONAL WETLANDS & WATERS OF THE UNITED STATES
- CZM RIPARIAN & WETLAND BUFFER (25 FT)

LOWER PATAPSCO AQUIFER
FORT MEADE, MARYLAND

WETLAND IMPACT PLATE

ARCADIS

FIGURE
1

CITY: MPLS DIV/GROUP: IM DB: MG LD: KS
FORT MEADE
Document Path: Z:\GISPROJECTS_ENV\Fort_Meade\ArcMap\OU4\2014\2014-07\Wetland_Impact_20140710.mxd

Appendix I

Photo Log

Interim Removal Action Report for OU-4 Area of Concern 3 (Lower Patapsco Aquifer Study Area)

Operable Unit 4, Lower Patapsco Study Area
Fort George G. Meade, Maryland

Photo 1: Drilling operations at EW-6

Date: July 19, 2013

Location Taken: Along Range Road

Direction Facing: Southeast

Photo 2: Well Construction at IW-4.

Date: July 25, 2013

Location Taken: Along Range Road

Direction Facing: West

Interim Removal Action Report for OU-4 Area of Concern 3 (Lower Patapsco Aquifer Study Area)

Operable Unit 4, Lower Patapsco Study Area
Fort George G. Meade, Maryland

Photo 3: Well Development at IW-1

Date: August 23, 2013

Location Taken: IW-1 Access Road

Direction Facing: East

Photo 4: Investigative Derived Waste Staging Area

Date: July 18, 2013

Location Taken: Magazine Road

Direction Facing: Southeast

Photo 5: Utility clearance prior to horizontal drilling activities.
Date: September 19, 2013
Location Taken: Intersection of Range Road and Closed Sanitary Landfill Access Road.
Direction Facing: Southwest

Photo 6: Bermed area along the Closed Sanitary Landfill Access Road utilized for horizontal drilling spoils.
Date: October 7, 2013
Location Taken: Closed Sanitary Landfill Access Road.
Direction Facing: North

Interim Removal Action Report for OU-4 Area of Concern 3 (Lower Patapsco Aquifer Study Area)

Operable Unit 4, Lower Patapsco Study Area
Fort George G. Meade, Maryland

Photo 7: Equipment staging area.
Date: October 7 , 2013
Location Taken: Closed Sanitary Landfill Access Road.
Direction Facing: Northwest

Photo 8: Treatment building access road prior to improvements.
Date: October 7, 2013
Location Taken: Range Road
Direction Facing: Northeast

Photo 9: Horizontal drilling adjacent to EW-2.
Date: December 3 , 2013
Location Taken: At EW-2, off Magazine Road.
Direction Facing: Southeast

Photo 10: Horizontal drilling entrance pit installation.
Date: January 13, 2014
Location Taken: Intersection of Range Road and Closed Sanitary Landfill Access Road.
Direction Facing: Northwest

Photo 11: Treatment building, backwash tank, and access road following gravel improvements

Date: December 3, 2013

Location Taken: Along Range Road.

Direction Facing: South

Photo 12: Pipe manifold inside the treatment building.

Date: January 16, 2014

Location Taken: Treatment building (Range Road).

Direction Facing: West

Photo 13: New power transformer installed.

Date: January 16, 2014

Location Taken: adjacent to EW-2 along Magazine Road.

Direction Facing: Northwest

Photo 14: Restoration completed at IW-4.

Date: June 13, 2014

Location Taken: Along Range Road.

Direction Facing: East

Photo 15: Asphalt repairs at EW-3.
Date: May 27, 2014
Location Taken: Along Magazine Road
Direction Facing: Southwest

Photo 16: Enclosure around treatment building.
Date: July 10, 2014
Location Taken: Treatment building off Range Road.
Direction Facing: Southwest

Appendix J

Response to Comments

Response to Comments Table

Draft Remedial Action Report for OU-4 Area of Concern 3 (Lower Patapsco Aquifer Study Area) Interim Removal Action

August 2014

Response Code: A = Agree with comment D = Disagree with comment C = Comment requires clarification N = Comment noted, no action required or taken

Comment Number	Commenter	Date of Comment	Page(s)	Section	Comment	Response Code	Response
EPA's comments							
1	EPA RPM	8/25/14	ES-2		The document provides a thorough description of the actions taken under the EE/CA and Action Memo, however, this document does not meet the Closeout Requirements for the Operable Unit (Remedial Action Completion Report (RACR)) if that is indeed the intent. No 'remedial action' has been completed at the site to date. The injections and the pump and treat system were installed as part of Removal Action (i.e. an EE/CA and Action Memo). A Remedial Action Completion Report (RACR) should be completed following the Record of Decision that documents the implementation of the selected remedial action. Additionally, LUCs will be selected as part of the ROD and documented in the remedial design. LUCs are not currently in place (final sentence on ES-3).	A	The report is intended only to document construction completion for actions completed under removal authority as stated on page ES-3: *This IRAR documents construction completion for the actions conducted under removal authority at the LPA Study Area as outlined in the IRAWP (ARCADIS, 2013b), including installation and operation of the HC groundwater treatment system in the LPA Study Area. This report confirms system construction is complete and the removal action is operating as intended and, therefore, supports both the Operational & Functional Determination and USEPA's preparation of a Preliminary Closeout Report. Remedial Action Objectives and requirements for long-term operation, maintenance, and monitoring of the remedial system will be formalized under remedial authority in a separate OU-4 Decision Document. Site Completion will be documented in a future Final Close Out Report after the groundwater response actions are successful and the site meets all criteria for Site Completion status, including: (1) all remedial decision documents have been completed and the selected remedy is consistent with Comprehensive Environmental Response, Compensation, and Liability Act, the National Oil and Hazardous Substances Pollution Contingency Plan, and USEPA policy and guidance; (2) all response actions have been completed (e.g., the cleanup levels associated with the response action(s) have been achieved) and appropriately documented in the Site file, and (3) all institutional controls are in place (USEPA, 2011).* To avoid confusion, the title of the report will be changed to the following: **Interim Removal Action Report for OU-4 Area of Concern 3 (Lower Patapsco Aquifer Study Area)**
2	EPA RPM	8/25/14	2		Bullet. Horizontal Drilling. There is no close to the parentheses.	A	Revised as requested.
MDE's comments							
1	MDE	9/4/14			The title of this document is "Remedial Action Report." However, the document describes the completion of field work in support of the Non-Time Critical Removal Action (NTCRA) at the OU-4 Lower Patapsco Aquifer Study Area. Please update the title to "Removal Action Report," and change any reference of "remedial action" to "removal action."	A	See response to EPA RPM Comment #1. Further, all references to "remedial action" were revised to "removal action".
2	MDE	9/4/14			Long-term monitoring should not be included as part of an NTCRA. Performance Monitoring associated with the NTCRA is appropriate, to ensure that the removal action is functioning as intended. However, any long-term monitoring should be implemented under the forthcoming remedial action. Please remove any reference to long-term monitoring as part of the NTCRA.	A	References in the IRAR to "LTM" were revised to "Semi-annual Sampling". ARCADIS and the Army agree that LTM of groundwater will be implemented under the forthcoming "remedial action".